PROJECT DRAWING INDEX

SOUTH FLORIDA FAIRGROUNDS
AMPHITHEATER
WEST PALM BEACH, FLORIDA

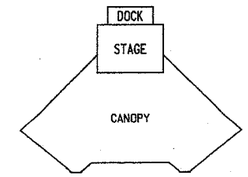

DWG. NO.	DESCRIPTION
01	GENERAL NOTES
02	ANCHOR BOLT PLAN
03	ANCHOR BOLT PLAN
04	BASE PLATE DETAILS
05	BASE PLATE DETAILS
06	BUILDING REACTIONS
07	NOT USED
08	ENDWALL ELEVATION AT LINE G
09	ELEVATION AT LINE A
10	ELEVATION AT LINE D
11	SIDEWALL ELEVATION
12	CROSS SECTION AT GRID LINE A
13	CROSS SECTION AT GRID LINE B
14	CROSS SECTION AT GRID LINE C
15	CROSS SECTION AT GRID LINE D
16	CROSS SECTION AT GRID LINES E & F
17	CROSS SECTION AT DOCK FRAME
18	GRID IRON FRAMING PLAN
19	NOT USED
20	NOT USED
21	BRACING ELEVATIONS
22	SWAY BRACE DETAILS
23	SWAY BRACE DETAILS
24	WIND BRACING DETAILS
25	PURLIN LAYOUT AT STAGE BUILDING
26	PARTIAL TOP CHORD FRAMING MEMBER LAYOUT
27	PARTIAL TOP CHORD FRAMING MEMBER LAYOUT
28	PARTIAL JOIST PLAN LAYOUT
29	PARTIAL JOIST PLAN LAYOUT
30	LONGITUDINAL CROSS SECTION THRU BUILDING
31	SECTIONS AT PURLINS
32	GIRT LAYOUT AT ENDWALL AT LINE D
33	GIRT LAYOUT AT ENDWALL AT LINE G
34	GIRT LAYOUT AT RIGHT SIDEWALL
35	GIRT LAYOUT AT LEFT SIDEWALL
36	ENLARGED GIRT LAYOUT DETAIL
37	SECTIONS AT GIRTS
38	SECTIONS AT GIRTS
39	SHEETING LAYOUT AT ENDWALL AT LINE D
40	SHEETING LAYOUT AT STAGE RIGHT SIDEWALL
41	SHEETING LAYOUT AT ENDWALL AT LINE G
42	SHEETING LAYOUT AT STAGE LEFT SIDEWALL
43	SHEETING LAYOUT AT STAGE ROOF
44	MR-24 SHEETING LAYOUT AT CANOPY ROOF
45	MR-24 CRATING LAYOUT AT CANOPY ROOF
46	PARTIAL DECK LAYOUT AT CANOPY ROOF
47	PARTIAL DECK LAYOUT AT CANOPY ROOF
48	PARTIAL CANOPY ROOF INSULATION
49	PARTIAL CANOPY ROOF INSULATION
50	ROOF DECK LAY OUT AT STAGE
51	ROOF INSULATION AT STAGE

Approved for Construc...

BUTLER®

BUTLER HEAVY STRUCTURES
GENERAL OFFICES – KANSAS CITY, MISSOURI

SOUTHERN CONSTRUCTION
SYSTEMS, INCORPORATED

SPECIFIC ERECTION DRAWING LIST

THE DRAWINGS LISTED BELOW HAVE BEEN CREATED BY COMPUTER SPECIFICALLY FOR YOUR ORDER TO ASSIST YOU IN PUTTING UP YOUR BUILDING. THESE SPECIFIC ERECTION DRAWINGS ARE THE SAME SIZE AS THIS SHEET AND CAN BE IDENTIFIED INDIVIDUALLY FROM THE TITLES AND DRAWING SEQUENCE NUMBERS THAT APPEAR IN THE LOWER RIGHT HAND CORNER OF EACH DRAWING.

DRAWING TITLE:		AG FILE NO.:	
ROOF SECONDARY STRUCTURAL FRAMING PLAN		DATE: 02/16/83	
	DRAWING NUMBER: D 83-123456-05L		REVISION 02

TITLE

THE YEAR DURING WHICH YOUR ORDER WAS ENTERED

THE BUTLER ORDER NUMBER OF YOUR ORDER

DRAWING SEQUENCE NUMBER

REVISION LEVEL OF THE DRAWING. IF THE DRAWING HAS NEVER BEEN REVISED, 00 APPEARS HERE.

SUPPLEMENTING THE SPECIFIC ERECTION DRAWINGS LISTED ARE SEVERAL GENERAL ERECTION DRAWINGS CALLED "PLANOGRAPHS". SEE THE DRAWING MANIFEST FOR A COMPLETE LIST OF THESE DRAWINGS.

FIELD WORK SUMMARY

WIND BRACING

FW0001 FIELD WORK MAY BE REQUIRED AT LOWER ROOF BEAM KNEE AREA FOR BRACING CLIP CONNECTION.

FW0088 FIELD WORK MAY BE REQUIRED ON ROOF BEAM FOR BRACING CLIP AT INTERMEDIATE LOCATIONS.

WALL SECONDARY

FW0008 FIELD LOCATE HOLES IN DOUBLE "C" HEADER FOR DOOR POST CONNECTION.

FW0010 FIELD LOCATE HOLES IN COLUMN OR POST FOR DOUBLE "C" HEADER CONNECTION IF REQUIRED.

FW0042 FIELD CUT AND LOCATE HOLES IN DOOR HEADER.

FW0043 FIELD CUT AND LOCATE HOLES IN DOUBLE "C" HEADER.

FW0056 FIELD WORK GIRT CHANNEL AT INTERMEDIATE SIDEWALL COLUMN WITH ADJACENT DOOR POST(S).

FW0072 FIELD WORK GIRT CHANNEL AT DOOR POST.

ROOF PANEL

FIELD DRILL HOLES IN BAR JOIST TOP CHORDS FOR ATTACHMENT OF MR-24 CLIPS.

GENERAL DRAWING NOTES

STANDARD NOTES:

CD0001 ATTACH PATENT PLATE 007849 TO THE WEB OF AN INTERMEDIATE FRAME COLUMN AT EYE LEVEL.

CD0002 PARTS SHOWN MAY BE UPGRADED DUE TO STANDARDIZED FABRICATION. REFER TO THE SHIPPING MANIFEST FOR POSSIBLE SUBSTITUTIONS.

CD0010

MATERIALS	ASTM DESIGNATION	
STRUCTURAL STEEL PLATE	EQUIV TO A-572	FY= 50KSI (GRADE 50)
LIGHT GAGE/COLD FORMED	EQUIV TO A-570	FY= 55KSI (GRADE 55)
BRACE RODS 3/4" & LESS	EQUIV TO A-108	GRADE 1018
BRACE RODS OVER 3/4"	EQUIV TO A-572	GRADE 50 OR GREATER
HOT ROLLED MILL SHAPES	A-36; A-572	FY= 36KSI; FY=50KSI
ROOF AND WALL PANELS	A-446	GRADE 45 OR GREATER
BOLTS	A-307 AND A-325	

CD0011 HIGH STRENGTH BOLTING:

ALL HIGH STRENGTH BOLTS ARE A-325-T WITH HEAVY HEX NUTS AND ARE TO BE INSTALLED USING THE "TURN-OF-THE-NUT" METHOD SPECIFIED IN THE NINTH EDITION OF THE AISC "SPECIFICATION FOR STRUCTURAL JOINTS USING ASTM A325 OR A490 BOLTS" PER SECTION 8 D (1). A-325 BOLTS MAY BE INSTALLED WITHOUT WASHERS WHEN TIGHTENED BY THE "TURN-OF-THE-NUT" METHOD. IT IS THE RESPONSIBILITY OF THE ERECTOR TO ASSURE PROPER TIGHTNESS. SEE INSTALLATION OF A-325T BOLT DRAWING D-1080268 (GROUP 52-38).

CD0013 IF THESE DRAWINGS ARE SEALED, THE SEAL APPLIES ONLY TO THE MATERIALS SUPPLIED BY BUTLER MFG. CO. AND IS NOT INTENDED AS THE SEAL OF THE ENGINEER OF RECORD FOR THE ENTIRE PROJECT.

RELEASED FOR CONSTRUCTION
10-31-95 (DATE) (INIT)
DESTROY ALL PREVIOUS COPIES
PHASE I FINAL

Approved for Construction

REVISION NO. 1	REVISION NO. 2			BUILDER:	PROJECT:	BUILDING ORDER DESCRIPTION:	DRAWING TITLE:		AG FILE NO:
DATE:	DATE:	BUTLER HEAVY STRUCTURES		SOUTHERN CONSTRUCTION SYSTEMS INCORPORATED	SOUTH FLORIDA FAIRGROUNDS AMPHITHEATER W. PALM BEACH, FLA.	CANOPY 30# LL + 3#CLL 110 MPH SBC 91	GENERAL NOTES	GROUP: 7	DATE: 05/31/95
DRAWN BY:	DRAWN BY:							DRAWING NUMBER: D 95-95502-01	REV. 00
CHECKED BY:	CHECKED BY:	GENERAL OFFICES-KANSAS CITY, MISSOURI							

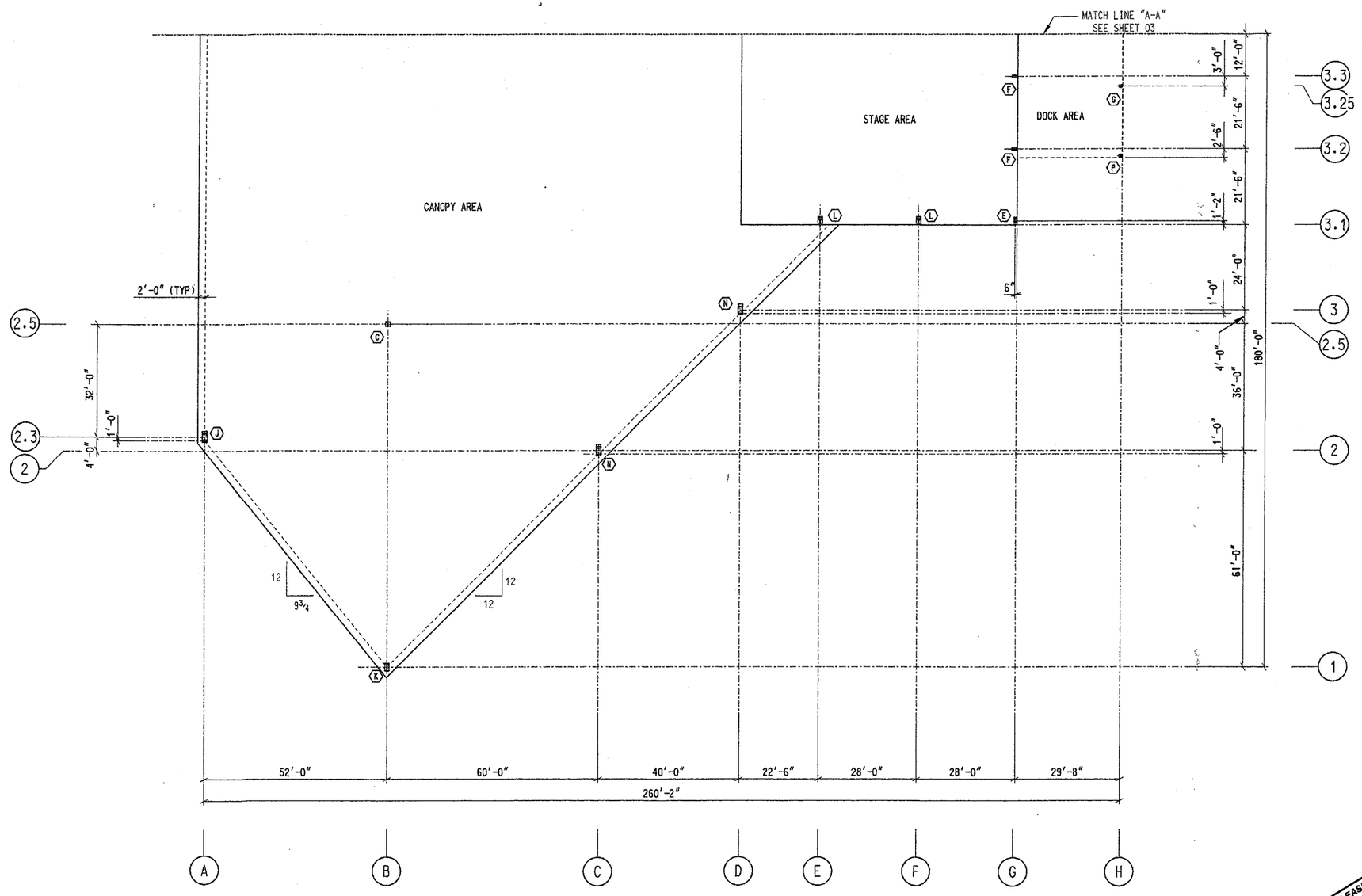

ANCHOR BOLT PLAN

RELEASED FOR CONSTRUCTION
10-31-95 (DATE) (INIT)
DESTROY ALL PREVIOUS COPIES
PHASE FINAL

Approved for Construction

REVISION NO. 1	REVISION NO. 2		BUILDER:	PROJECT:	BUILDING ORDER DESCRIPTION:	DRAWING TITLE:		AG FILE NO:
DATE:	DATE:	BUTLER BUTLER HEAVY STRUCTURES GENERAL OFFICES-KANSAS CITY, MISSOURI	SOUTHERN CONSTRUCTION SYSTEMS INCORPORATED	SOUTH FLORIDA FAIRGROUNDS AMPHITHEATER W. PALM BEACH, FLA.	CANOPY 30# LL + 3#CLL 110 MPH SBC 91	ANCHOR BOLT BASE PLATE DRAWING	GROUP: 7	DATE: 05/31/95
DRAWN BY:	DRAWN BY:						DRAWING NUMBER: D 95-95502-02	REV. 00
CHECKED BY:	CHECKED BY:							

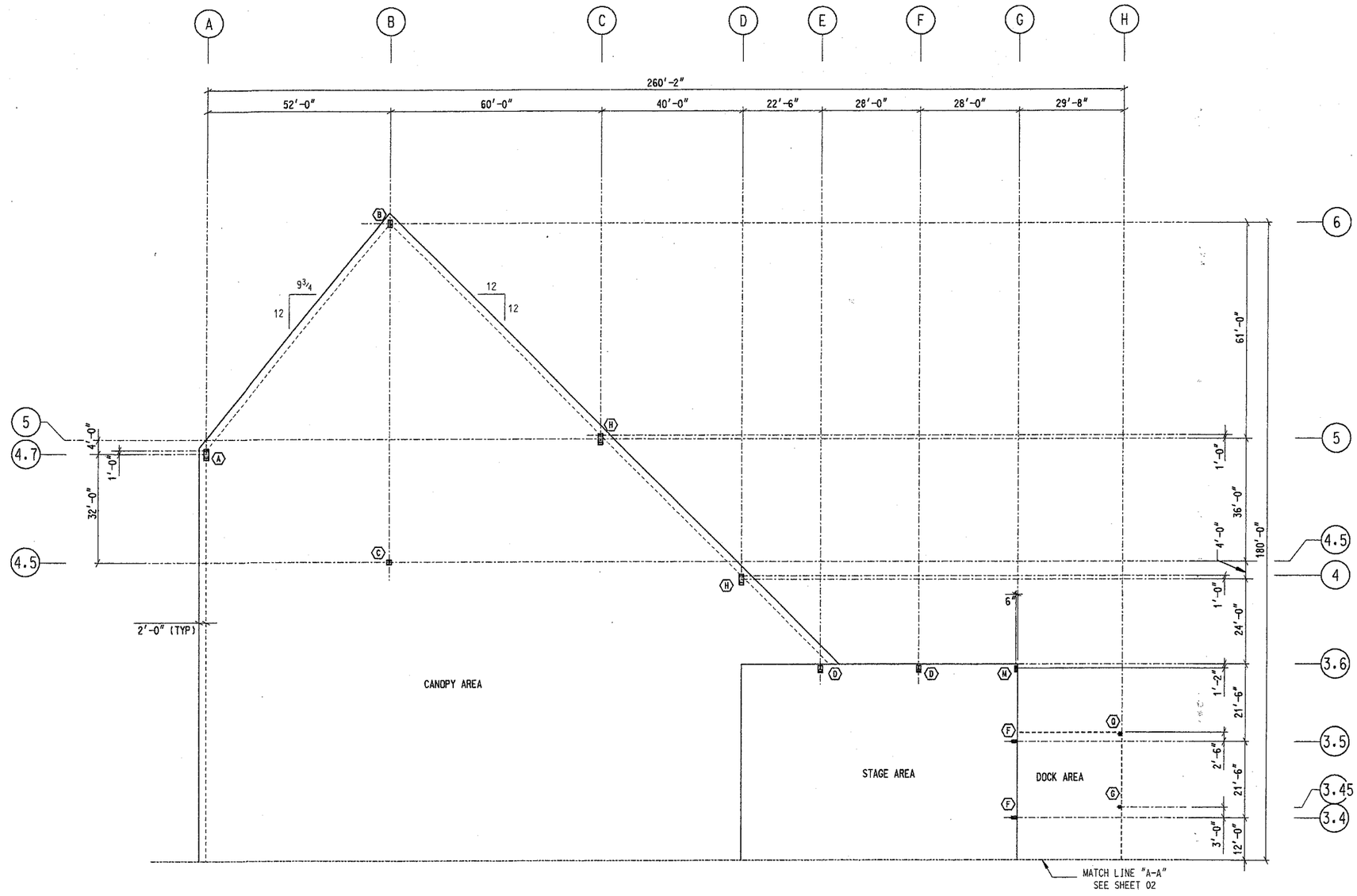

ANCHOR BOLT PLAN

Approved for Construction

RELEASED FOR CONSTRUCTION
10-31-95 (DATE) (INIT)
DESTROY ALL PREVIOUS COPIES
PHASE I FINAL

REVISION NO. 1	REVISION NO. 2			BUILDER:	PROJECT:	BUILDING ORDER DESCRIPTION:	DRAWING TITLE:		AG FILE NO:
DATE:	DATE:	BUTLER BUTLER HEAVY STRUCTURES GENERAL OFFICES-KANSAS CITY, MISSOURI		SOUTHERN CONSTRUCTION SYSTEMS INCORPORATED	SOUTH FLORIDA FAIRGROUNDS AMPHITHEATER W. PALM BEACH, FLA.	CANOPY 30# LL + 3#CLL 110 MPH SBC 91	ANCHOR BOLT BASE PLATE DRAWING	GROUP: 7	DATE: 05/31/95
DRAWN BY:	DRAWN BY:							DRAWING NUMBER: D 95-95502-03	REV. 00
CHECKED BY:	CHECKED BY:								

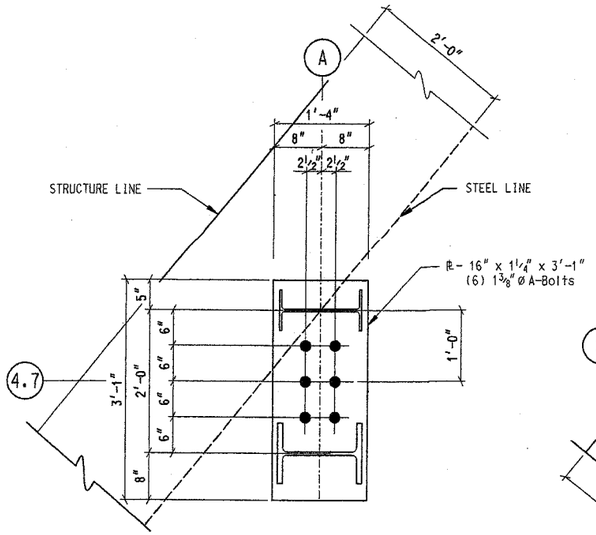

BASE PLATE TYPE A
1-REQUIRED

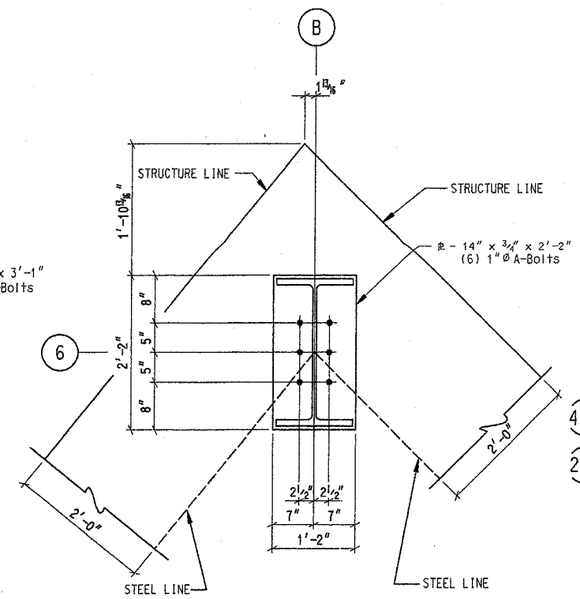

BASE PLATE TYPE B
1-REQUIRED

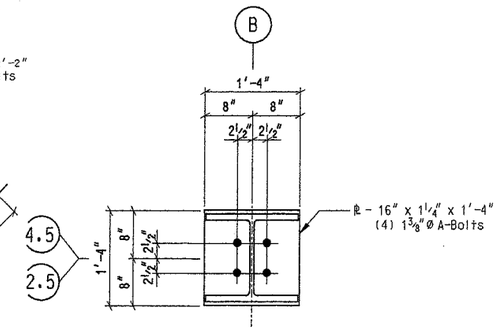

BASE PLATE TYPE C
2-REQUIRED

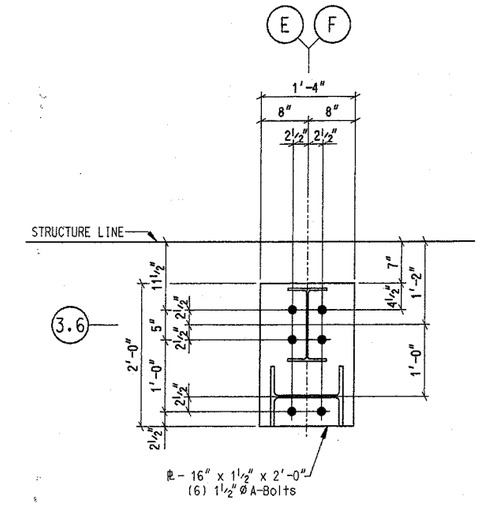

BASE PLATE TYPE D
2-REQUIRED

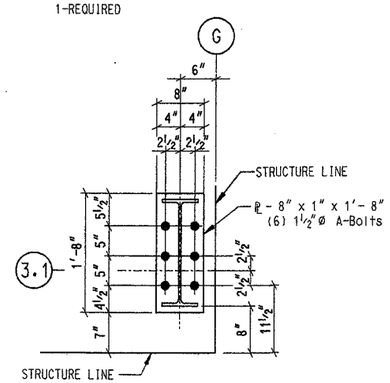

BASE PLATE TYPE E
1-REQUIRED

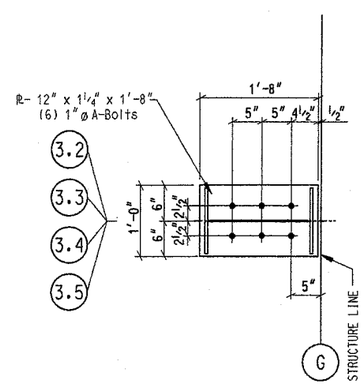

BASE PLATE TYPE F
4-REQUIRED

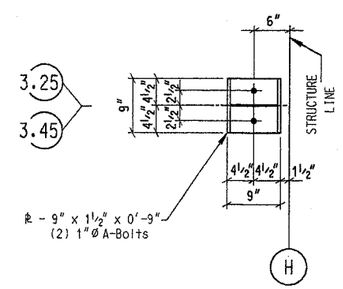

BASE PLATE TYPE G
2-REQUIRED

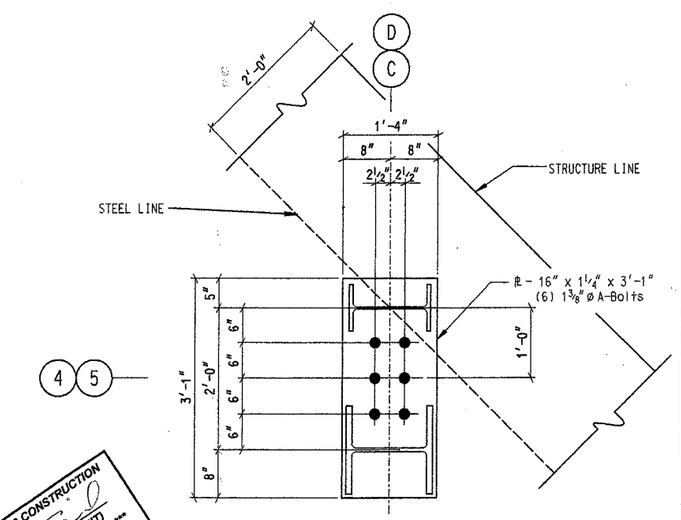

BASE PLATE TYPE H
2-REQUIRED

RELEASED FOR CONSTRUCTION
6-31-95 (DATE) BLO (INIT)
DESTROY ALL PREVIOUS COPIES
PHASE FIVE

Approved for Construction

REVISION NO. 1	REVISION NO. 2		BUILDER:	PROJECT:	BUILDING ORDER DESCRIPTION:	DRAWING TITLE:		AG FILE NO:
DATE:	DATE:	BUTLER BUTLER HEAVY STRUCTURES GENERAL OFFICES-KANSAS CITY, MISSOURI	SOUTHERN CONSTRUCTION SYSTEMS INCORPORATED	SOUTH FLORIDA FAIRGROUNDS AMPHITHEATER W. PALM BEACH, FLA.	CANOPY 30# LL + 3#CLL 110 MPH SBC 91	BASE PLATE DETAIL DRAWING	GROUP: 7	DATE: 05/31/95
DRAWN BY:	DRAWN BY:						DRAWING NUMBER: D 95-95502-04	REV. 00
CHECKED BY:	CHECKED BY:							

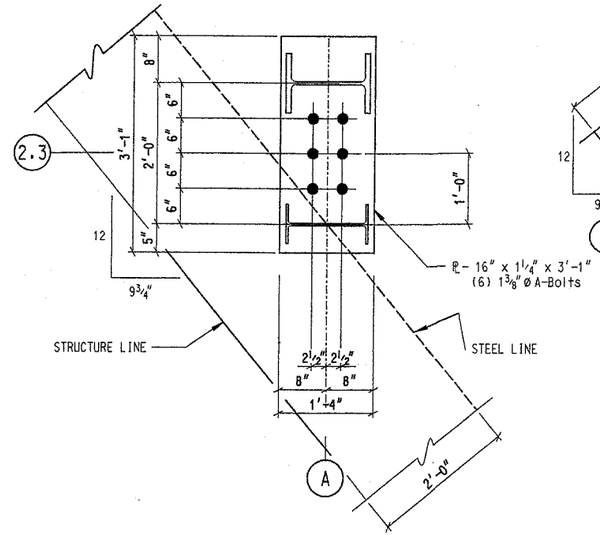

BASE PLATE TYPE J

1-REQUIRED

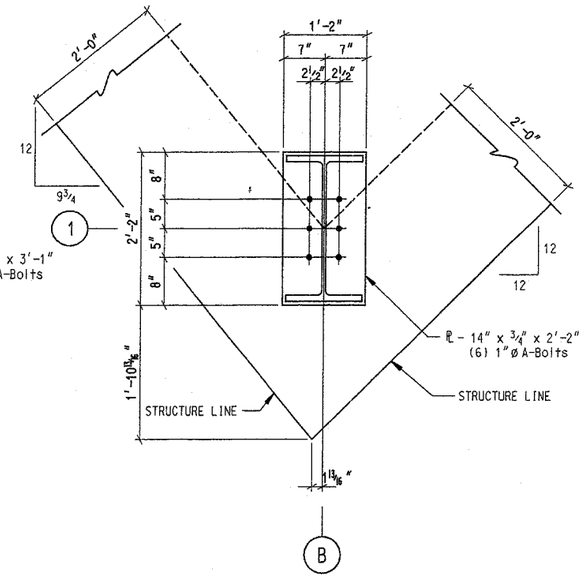

BASE PLATE TYPE K

1-REQUIRED

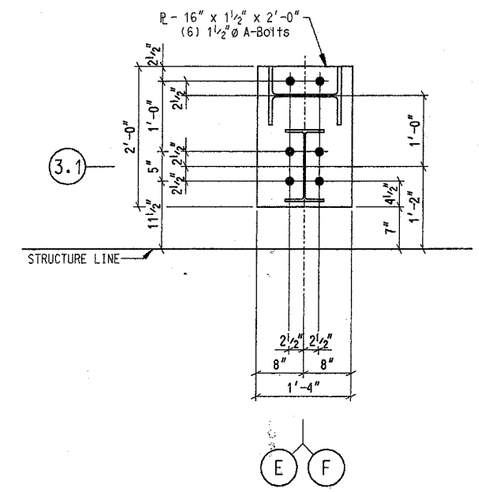

BASE PLATE TYPE L

2-REQUIRED

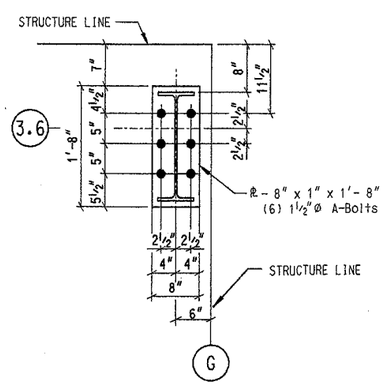

BASE PLATE TYPE M

1-REQUIRED

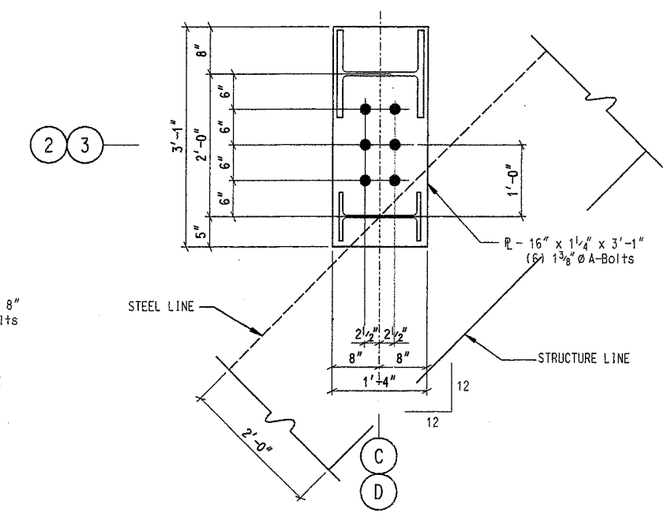

BASE PLATE TYPE N

2-REQUIRED

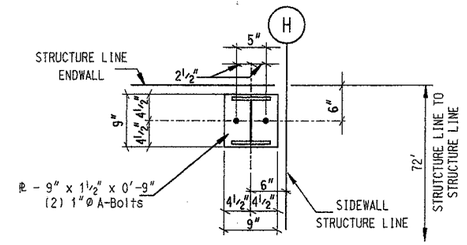

BASE PLATE TYPE Q

1-REQUIRED

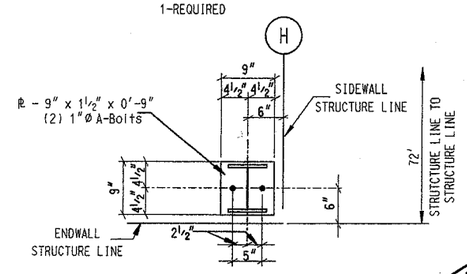

BASE PLATE TYPE P

1-REQUIRED

RELEASED FOR CONSTRUCTION
10-31-95 (DATE) (INIT)
DESTROY ALL PREVIOUS COPIES
PHASE I FINAL

Approved for Construction

REVISION NO. 1	REVISION NO. 2			BUILDER:	PROJECT:	BUILDING ORDER DESCRIPTION:	DRAWING TITLE:		AG FILE NO:
DATE:	DATE:	BUTLER BUTLER HEAVY STRUCTURES GENERAL OFFICES-KANSAS CITY, MISSOURI		SOUTHERN CONSTRUCTION SYSTEMS INCORPORATED	SOUTH FLORIDA FAIRGROUNDS AMPHITHEATER W. PALM BEACH, FLA.	CANOPY 30# LL + 3#CLL 110 MPH SBC 91	BASE PLATE DETAIL DRAWING	GROUP: 7	DATE: 05/31/95
DRAWN BY:	DRAWN BY:							DRAWING NUMBER:	REV.
CHECKED BY:	CHECKED BY:							D 95-95502-05	00

		GRID A		GRID C		GRID D		GRID B		
		HORIZ	VERT	HORIZ	VERT	HORIZ	VERT	SW HORIZ	SW VERT	INT VERT
DL	DEAD LOAD	49	79	47	87	16	48	1	32	91
CL	COLLATERAL LOAD	12	18	13	21	9	19	1	7	22
LL	LIVE LOAD	60	82	78	123	21	54	2	37	136
WL	WIND LOAD	-100	-145	-138	-208	-53	-123	-4	-78	-234
	DL+LL+CL	121	179	138	231	46	121	4	76	249
	DL+WL	-51	-66	-91	-121	-37	-75	-3	-46	-143

		GRIDS E & F		
	LOAD CASE	HORIZ	LONGITUD	VERT
DL	DEAD LOAD	7		38
CL	COLLATERAL LOAD	8		33
LL	LIVE LOAD	7		32
	WIND LOAD/MAX H.	-39	1	-26
	WIND LOAD/MAX L.	-20	110	-270
	WIND LOAD/MAX U.	-20	110	-270
	WL/MAX WIND DOWN	3	110	108
	DL+LL+CL	22	N/A	103
	DL+WL/MAX LONGIT	-13	110	-232
	DL+WL/MAX HORIZ	-32	1	12
	DL+WL/MAX UPLIFT	-13	110	-232
	DL+WL/MAX WIND DOWN	10	110	146

		GRID G							GRID H	
		COL 3.1 & 3.6			COL 3.2 & 3.5		COL 3.3 & 3.4			
		HORIZ	LONGITUD	VERT	HORIZ	VERT	HORIZ	VERT	HORIZ	VERT
DL	DEAD LOAD	1		6	0	8	0	10		1
CL	COLLATERAL LOAD	1		2	0	2	0	2		1
LL	LIVE LOAD	1		4	0	7	0	13		7
	WIND LOAD/MAX HORIZ	33		-61	15	-61	N/A	N/A		
	WIND LOAD/MAX LONGIT	1	-79	-137	30	-24	30	-35		
	WIND LOAD/MAX UPLIFT	1	-79	-137	15	-61	30	-35		-18
	WIND LOAD/MAX WIND DOWN	1	1	174	1	39	N/A	N/A		
	DL+LL+CL	3	N/A	12	N/A	17	N/A	25		9
	DL+WL/MAX LONGIT	2	-79	-131	30	-16	30	-25		
	DL+WL/MAX HORIZ	34	0	-55	15	-53				
	DL+WL/MAX UPLIFT	2	-79	-131	15	-53	30	-25		-17
	DL+WL/MAX WIND DOWN	2	1	180	1	47				

DESIGN LOADS:

DEAD LOAD: 4 psf plus member self-wts
COLLATERAL LOADS: 3 psf uniform, plus gridiron,
lighting platforms,
video tubes, and speakers
LIVE LOAD: 18 psf (30 psf reducible Live Load)
WIND LOAD: 110 mph per SBC'91
IMPORTANCE FACTOR: 1.15

REACTION NOTES:

1. THE VERTICAL (V) AND HORIZONTAL (H AND Z) REACTION ARE STATED IN KIPS. (1 KIP = 1000 POUNDS) POSITIVE DIRECTION IS AS SHOWN IN THE FOLLOWING DIAGRAM.
2. MOMENT REACTIONS ARE STATED IN INCH-KIPS AND ARE POSITIVE IN A CLOCKWISE DIRECTION.
3. THE FORCE ON THE ANCHOR BOLTS OR FOUNDATION WILL BE IN THE OPPOSITE DIRECTION TO THAT SHOWN.
4. MAXIMUM REACTION SUMMARY IS THE MAXIMUM POSITIVE AND NEGATIVE REACTIONS BASED ON THE REQUIRED LOAD COMBINATIONS.

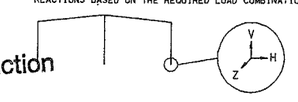

Approved for Construction

REVISION NO. 1		REVISION NO. 2								
DATE: 11-8-95	GENERAL REVISION	DATE:		BUTLER HEAVY STRUCTURES	BUILDER: SOUTHERN CONSTRUCTION SYSTEMS INCORPORATED	PROJECT: SOUTH FLORIDA FAIRGROUNDS AMPHITHEATER W. PALM BEACH, FLA.	BUILDING ORDER DESCRIPTION: CANOPY 30# LL + 3#CLL 110 MPH SBC 91	DRAWING TITLE: SPECIFIC REACTION DRAWING		AG FILE NO:
DRAWN BY: GMD		DRAWN BY:		GENERAL OFFICES-KANSAS CITY, MISSOURI					GROUP: 7	DATE: 05/31/95
CHECKED BY:		CHECKED BY:							DRAWING NUMBER: D 95-95502-06	REV. 01

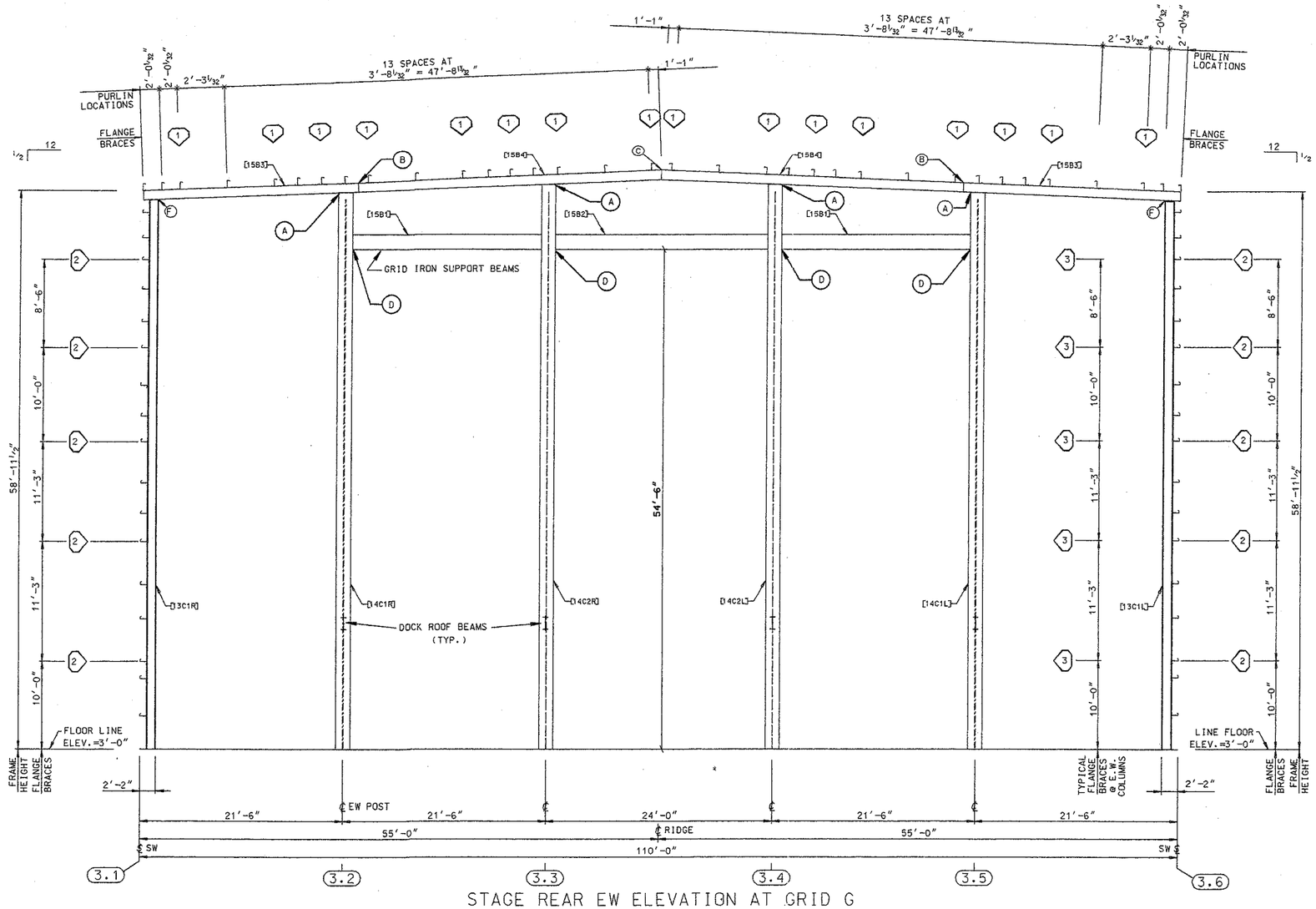

STAGE REAR EW ELEVATION AT GRID G

BOLTED CONNECTION SCHEDULE					
⬡	QUANTITY	BOLT NO.	DESCRIPTION	NUT NO.	DETAIL
A	04		3/4 X 2 1/2 BOLT A325T		
B	03		3/4 X 2 1/2 BOLT A325T		
C	06		3/4 X 2 BOLT A325T		
D	06		3/4 X 2 BOLT A325T		
F	04		3/4 X 2 1/2 BOLT A325T		

FLANGE BRACE SCHEDULE				
⬡	PART NO.	DIM. "Y"	DETAIL	FIELD WORK △
1	005661	1'-4"	C001	
2	005661	1'-4"	C007	
3	005673	2'-1 1/2 "	C021	

RELEASED FOR CONSTRUCTION
10-31-95 (DATE) (INIT)
DESTROY ALL PREVIOUS COPIES
PHASE II FINAL

Approved for Construction

REVISION NO. 1	REVISION NO. 2		BUILDER:	PROJECT:	BUILDING ORDER DESCRIPTION:	DRAWING TITLE:		AG FILE NO:
DATE:	DATE:	BUTLER BUTLER HEAVY STRUCTURES GENERAL OFFICES-KANSAS CITY, MISSOURI	SOUTHERN CONSTRUCTION SYSTEMS INCORPORATED	SOUTH FLORIDA FAIRGROUNDS AMPHITHEATER W. PALM BEACH, FLA.	STAGE 30# LL + 3#CLL 110 MPH SBC 91	CROSS SECTION ERECTION DRAWING	GROUP: 7	DATE: 07/28/95
DRAWN BY:	DRAWN BY:						DRAWING NUMBER: D 95-95502-08	REV. 00
CHECKED BY:	CHECKED BY:							

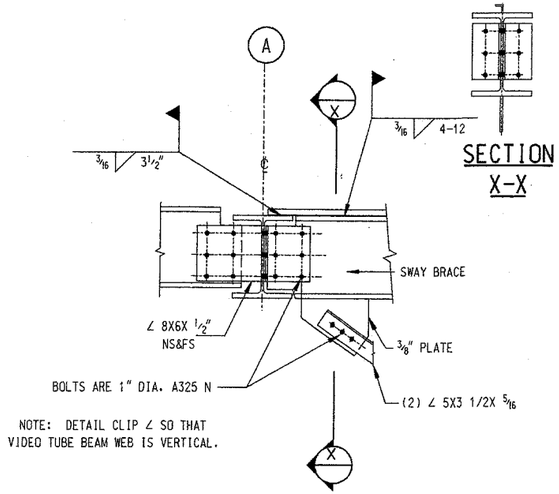

TOP STRUT TO VIDEO TUBE BEAM
SECTION A

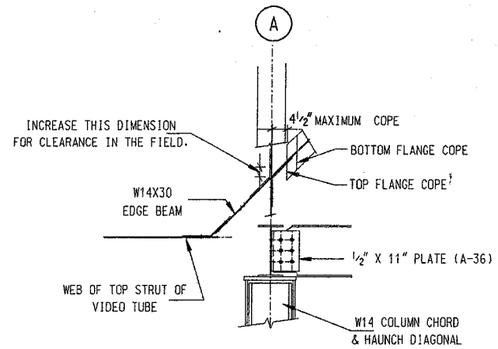

VIDEO TUBE EDGE BEAM
SECTION B

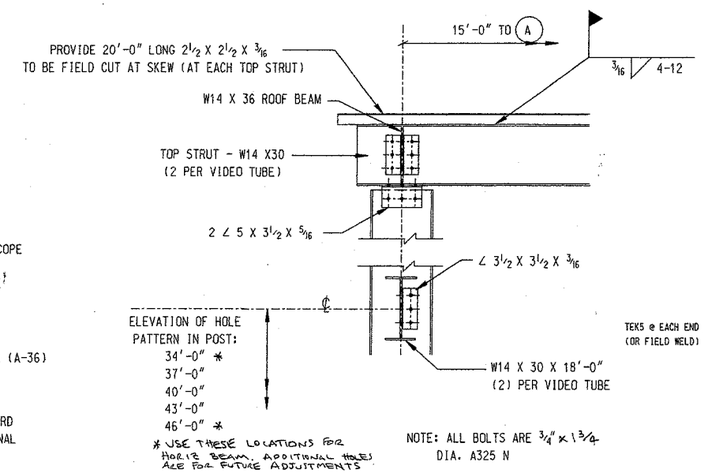

VIDEO TUBE COL. & BEAM SUPPORT
SECTION C

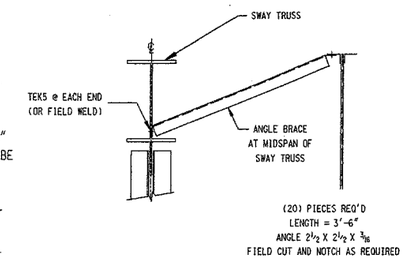

SWAY TRUSS ANGLE BRACE
(1) PER SWAY TRUSS

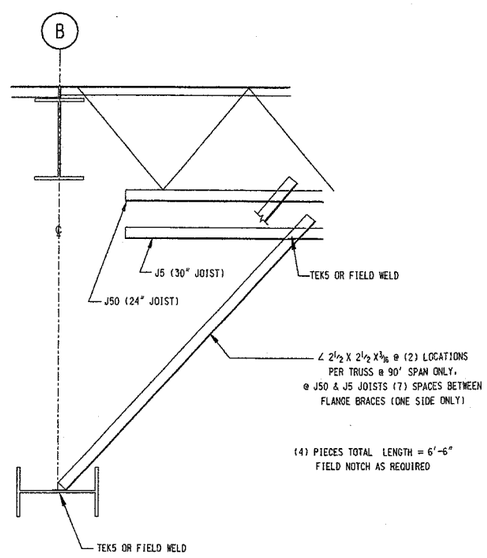

BOTTOM CHORD BRACE FOR
GRID LINE "B"

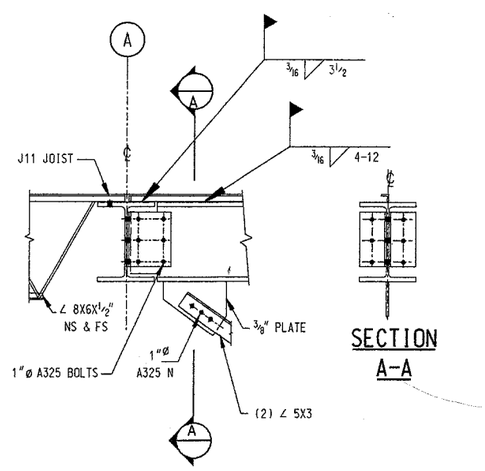

VIDEO TUBE
TOP STRUT TO TRUSS

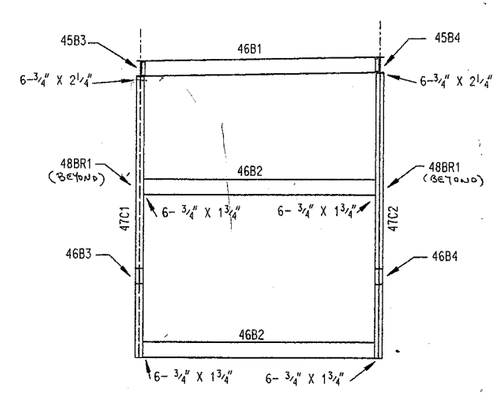

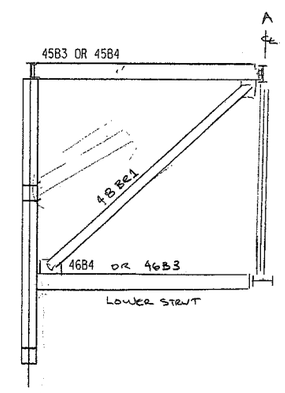

VIDEO TUBE SUPPORT

WORK W/DGNS. 26 & 27

Approved for Construction

REVISION NO. 1	REVISION NO. 2		BUILDER:	PROJECT:	BUILDING ORDER DESCRIPTION:	DRAWING TITLE:		AG FILE NO:
DATE:	DATE:	BUTLER BUTLER HEAVY STRUCTURES GENERAL OFFICES-KANSAS CITY, MISSOURI	SOUTHERN CONSTRUCTION SYSTEMS INCORPORATED	SOUTH FLORIDA FAIRGROUNDS AMPHITHEATER W. PALM BEACH, FLA.	CANOPY 30# LL + 3#CLL 110 MPH SBC 91	ROOF STRUCTURAL DETAILS	GROUP: 7	DATE: 11/10/95
DRAWN BY:	DRAWN BY:						DRAWING NUMBER:	REV.
CHECKED BY:	CHECKED BY:						D 95-95502-26A	00

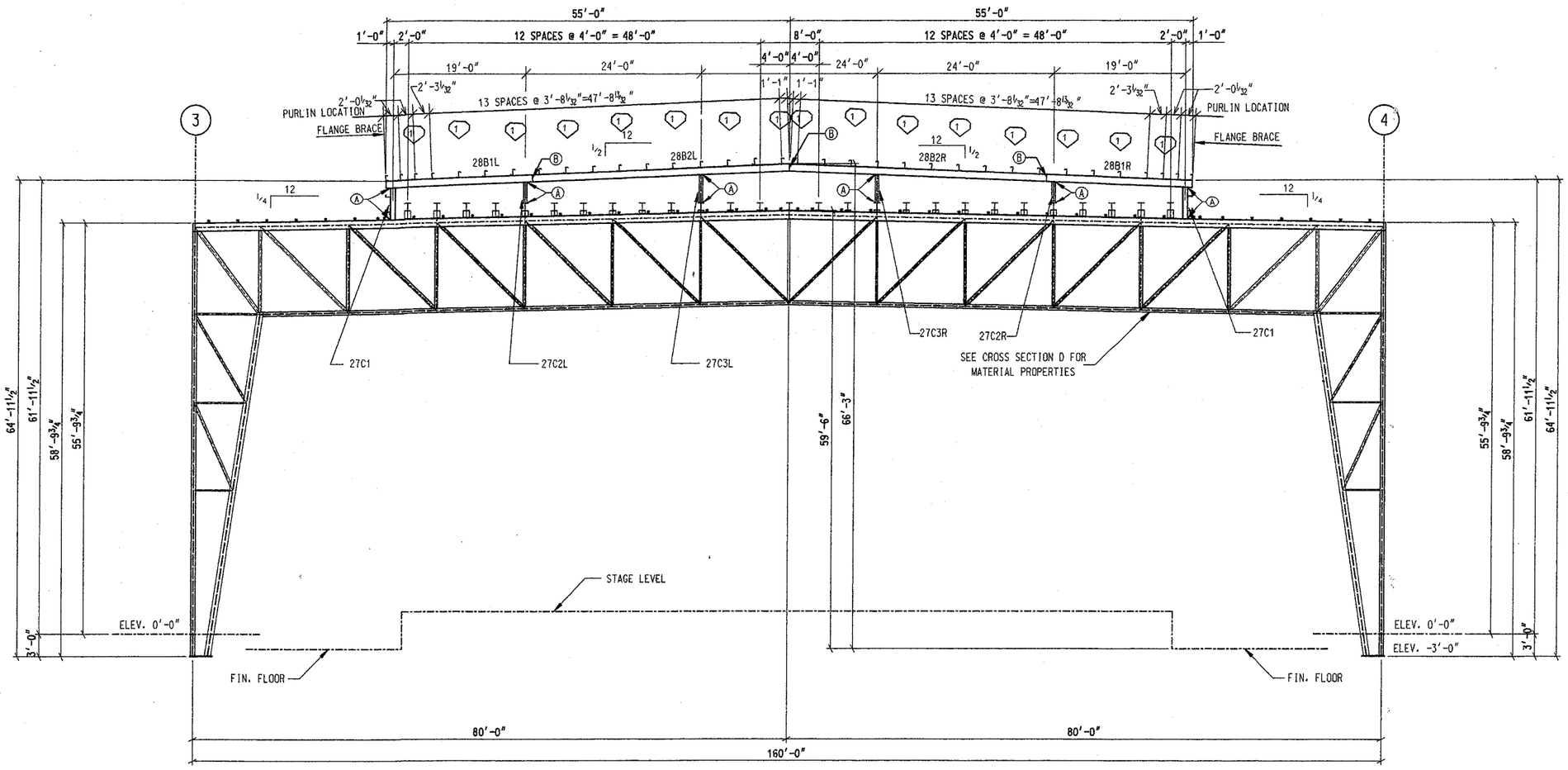

ELEVATION AT GRID LINE D

BOLTED CONNECTION SCHEDULE					
○	QUANTITY	BOLT NO.	DESCRIPTION	NUT NO.	DETAIL
A	4		3/4" DIA. X 2 1/4"-A325N		
B	6		3/4" DIA. X 2 1/2"-A325N		

FLANGE BRACE SCHEDULE				
♡	PART NO.	DIM. "Y"	DETAIL	FIELD WORK △
1	005661	1'-4"	C001	

STANDARD NOTES:

IF0001 ALL HIGH STRENGTH BOLTS ARE A-325-T WITH HEAVY HEX NUTS AND ARE TO BE INSTALLED USING THE "TURN-OF-THE-NUT" METHOD SPECIFIED IN THE NINTH EDITION OF THE AISC "SPECIFICATION FOR STRUCTURAL JOINTS USING ASTM A325 OR A490 BOLTS" PER SECTION 8 D (1). A-325 BOLTS MAY BE INSTALLED WITHOUT WASHERS WHEN TIGHTENED BY THE "TURN-OF-THE-NUT" METHOD. IT IS THE RESPONSIBILITY OF THE ERECTOR TO ASSURE PROPER TIGHTNESS. SEE INSTALLATION OF A-325T BOLT DRAWING D-1080268 (GROUP 52-38).

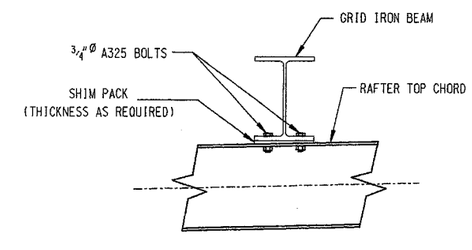

GRID IRON BEAM ATTACHMENT WITH NO SPACE FOR STUB SUPPORT

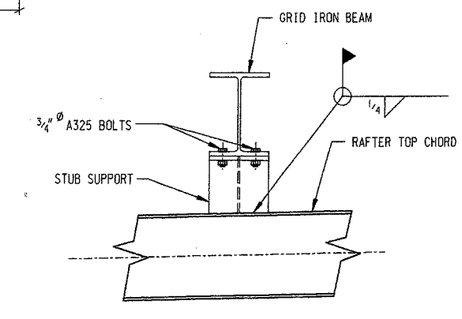

GRID IRON BEAM ATTACHMENT WITH STUB SUPPORT

Approved for Construction

REVISION NO. 1	REVISION NO. 2							
DATE:	DATE:	BUTLER HEAVY STRUCTURES	BUILDER: SOUTHERN CONSTRUCTION SYSTEMS INCORPORATED	PROJECT: SOUTH FLORIDA FAIRGROUNDS AMPHITHEATER W. PALM BEACH, FLA.	BUILDING ORDER DESCRIPTION: CANOPY 30# LL + 3#CLL 110 MPH SBC 91	DRAWING TITLE: ELEVATION AT GRID LINE D DRAWING	GROUP: 7	AG FILE NO: DATE: 05/31/95
DRAWN BY:	DRAWN BY:	GENERAL OFFICES-KANSAS CITY, MISSOURI					DRAWING NUMBER: D 95-95502-10	REV. 00
CHECKED BY:	CHECKED BY:							

561
.718
8874

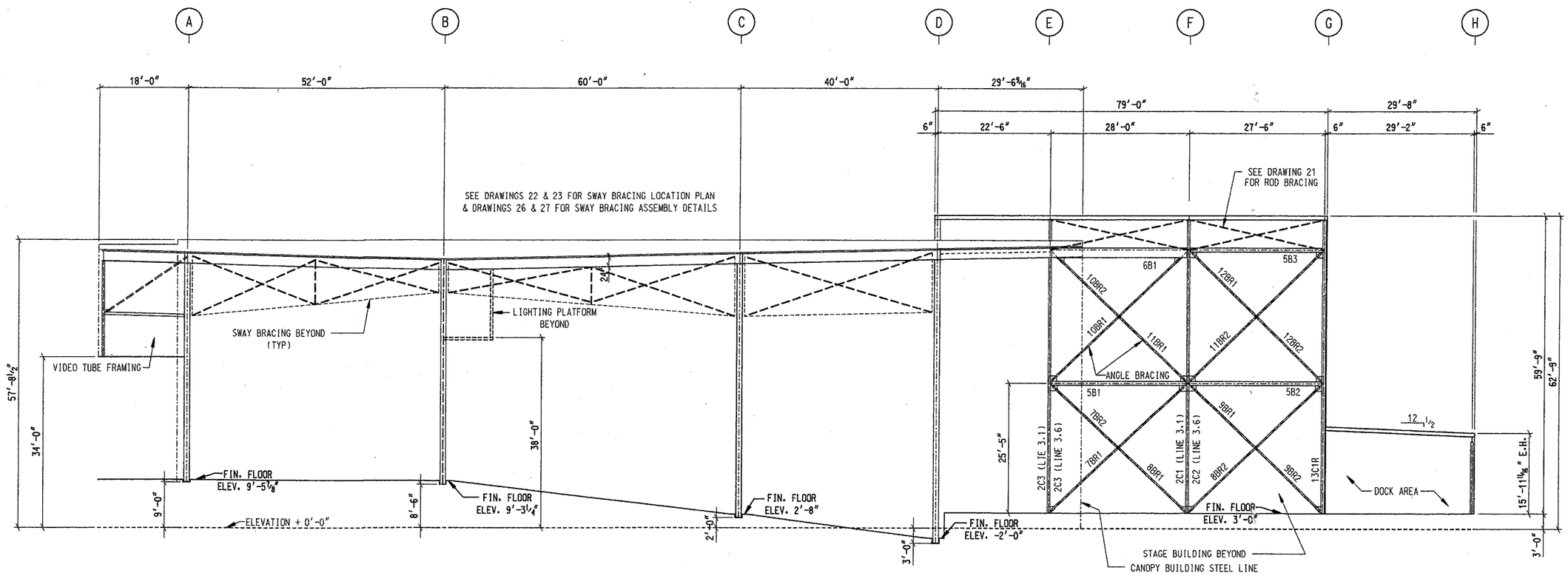

SIDEWALL ELEVATION @ COL. LINE 1 (AS SHOWN)
SIDEWALL ELEVATION @ COL. LINE 6 (OPP. HAND)

NOTE: ALL ANGLE BRACING SHOWN IS ASTM-A-36-, DOUBLE ANGLE

Approved for Construction

REVISION NO. 1		REVISION NO. 2								
DATE:		DATE:		BUTLER BUTLER HEAVY STRUCTURES GENERAL OFFICES-KANSAS CITY, MISSOURI	BUILDER: SOUTHERN CONSTRUCTION SYSTEMS INCORPORATED	PROJECT: SOUTH FLORIDA FAIRGROUNDS AMPHITHEATER W. PALM BEACH, FLA.	BUILDING ORDER DESCRIPTION: CANOPY 30# LL + 3#CLL 110 MPH SBC 91	DRAWING TITLE: SIDEWALL ELEVATION DRAWING	GROUP: 7	AG FILE NO: DATE: 05/31/95
DRAWN BY:		DRAWN BY:							DRAWING NUMBER: D 95-95502-11	REV. 00
CHECKED BY:		CHECKED BY:								

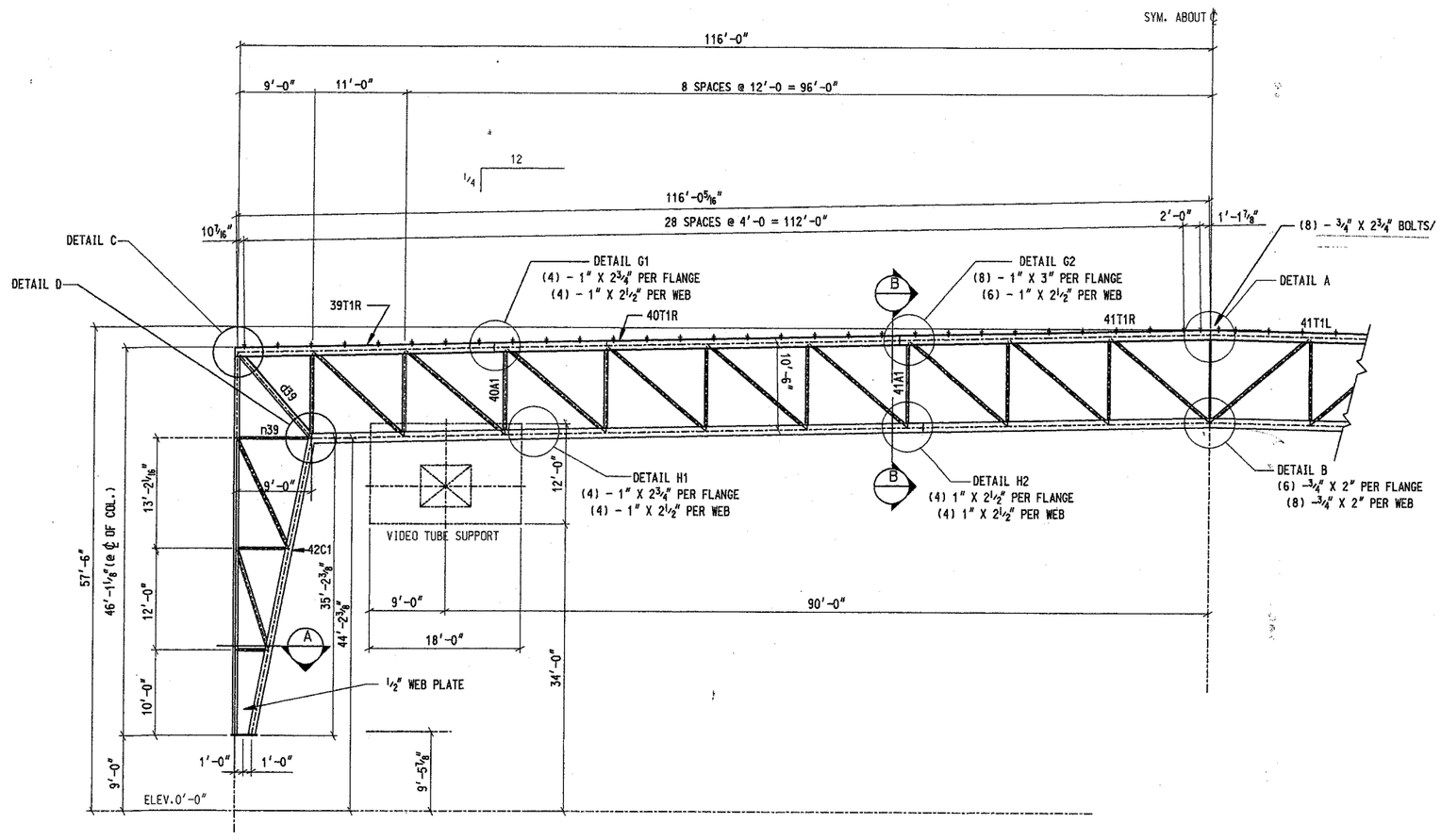

CROSS SECTION AT GRID LINE A

LOOKING FROM THE STAGE

n39 - 3/4" x 2" BOLTS (6) @ EACH END
d39 - (28) - 1" X 2 3/4" A325 BOLTS AT EACH END
DETAIL C - (20)- 1" X 2 3/4" A325 (10 PER FLANGE)
DETAIL D - (32)- 1" X 2 3/4" A325 (16 PER FLANGE)
41A1 - (2) - 3/4" X 2 3/4" @ EACH FLANGE
40A1 - (4) - 1" X 3" @ EACH END

Approved for Construction

REVISION NO. 1	REVISION NO. 2								
DATE:	DATE:	BUTLER BUTLER HEAVY STRUCTURES GENERAL OFFICES-KANSAS CITY, MISSOURI	BUILDER: SOUTHERN CONSTRUCTION SYSTEMS INCORPORATED	PROJECT: SOUTH FLORIDA FAIRGROUNDS AMPHITHEATER W. PALM BEACH, FLA.	BUILDING ORDER DESCRIPTION: CANOPY 30# LL + 3#CLL 110 MPH SBC 91	DRAWING TITLE: CROSS SECTION GRID LINE A DRAWING		AG FILE NO:	
DRAWN BY:	DRAWN BY:						GROUP: 7	DATE: 05/31/95	
CHECKED BY:	CHECKED BY:						DRAWING NUMBER: D 95-95502-12		REV. 00

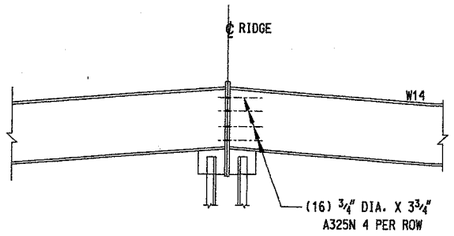

RIDGE TOP CHORD

DETAIL A

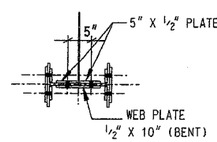

SECTION X

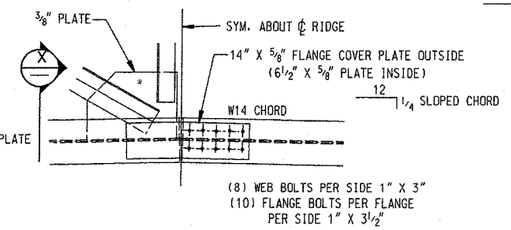

DETAIL B

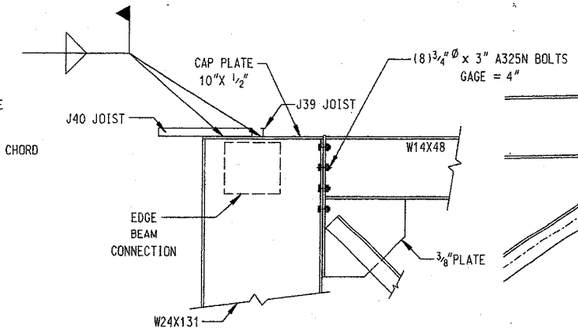

DETAIL C

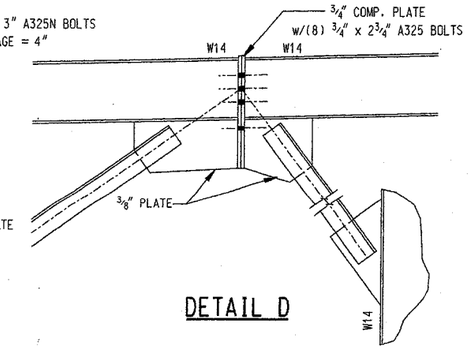

DETAIL D

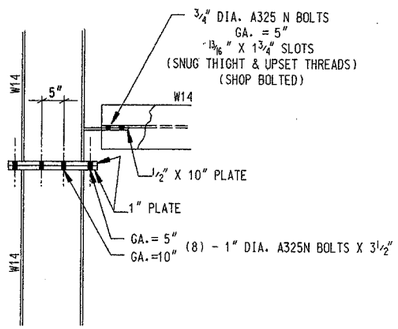

DETAIL E

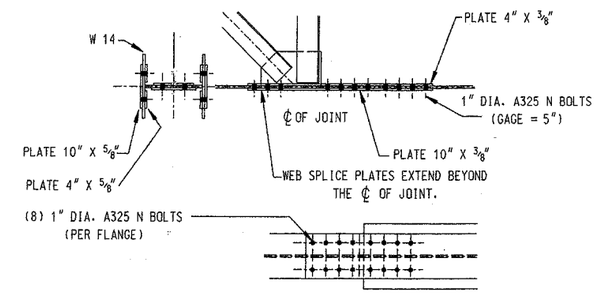

DETAIL HI

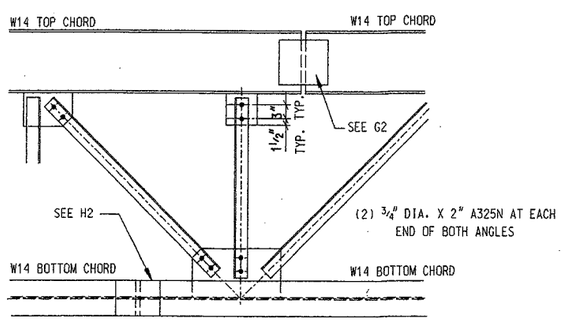

ANGLE CONNECTION @ BOLTED SPLICE G2/H2

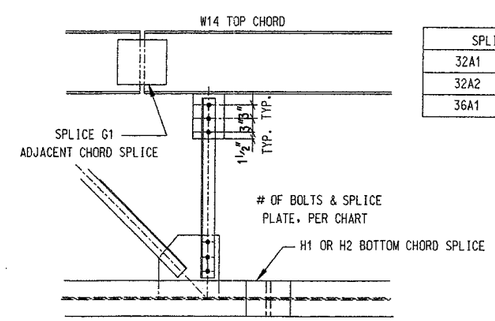

ANGLE CONNECTION @ BOLTED SPLICE @ G1

SPLICE	BOLTS REQUIRED @ ANGLES
32A1	(2)3/4" X 2" EACH END
32A2	(2)3/4" X 2" EACH END
36A1	(4)3/4" X 2 1/4" EACH END

NOTE: WORK THIS DGN. WITH DGN. 13.

Approved for Construction

REVISION NO. 1	REVISION NO. 2			BUILDER:	PROJECT:	BUILDING ORDER DESCRIPTION:	DRAWING TITLE:		AG FILE NO:
DATE:	DATE:	BUTLER		SOUTHERN CONSTRUCTION SYSTEMS INCORPORATED	SOUTH FLORIDA FAIRGROUNDS AMPHITHEATER W. PALM BEACH, FLA.	CANOPY 30# LL + 3#CLL 110 MPH SBC 91	CROSS SECTION GRID LINE B DRAWING	GROUP: 7	DATE: 11/11/95
DRAWN BY:	DRAWN BY:	BUTLER HEAVY STRUCTURES						DRAWING NUMBER:	REV.
CHECKED BY:	CHECKED BY:	GENERAL OFFICES-KANSAS CITY, MISSOURI						D 95-95502-13A	00

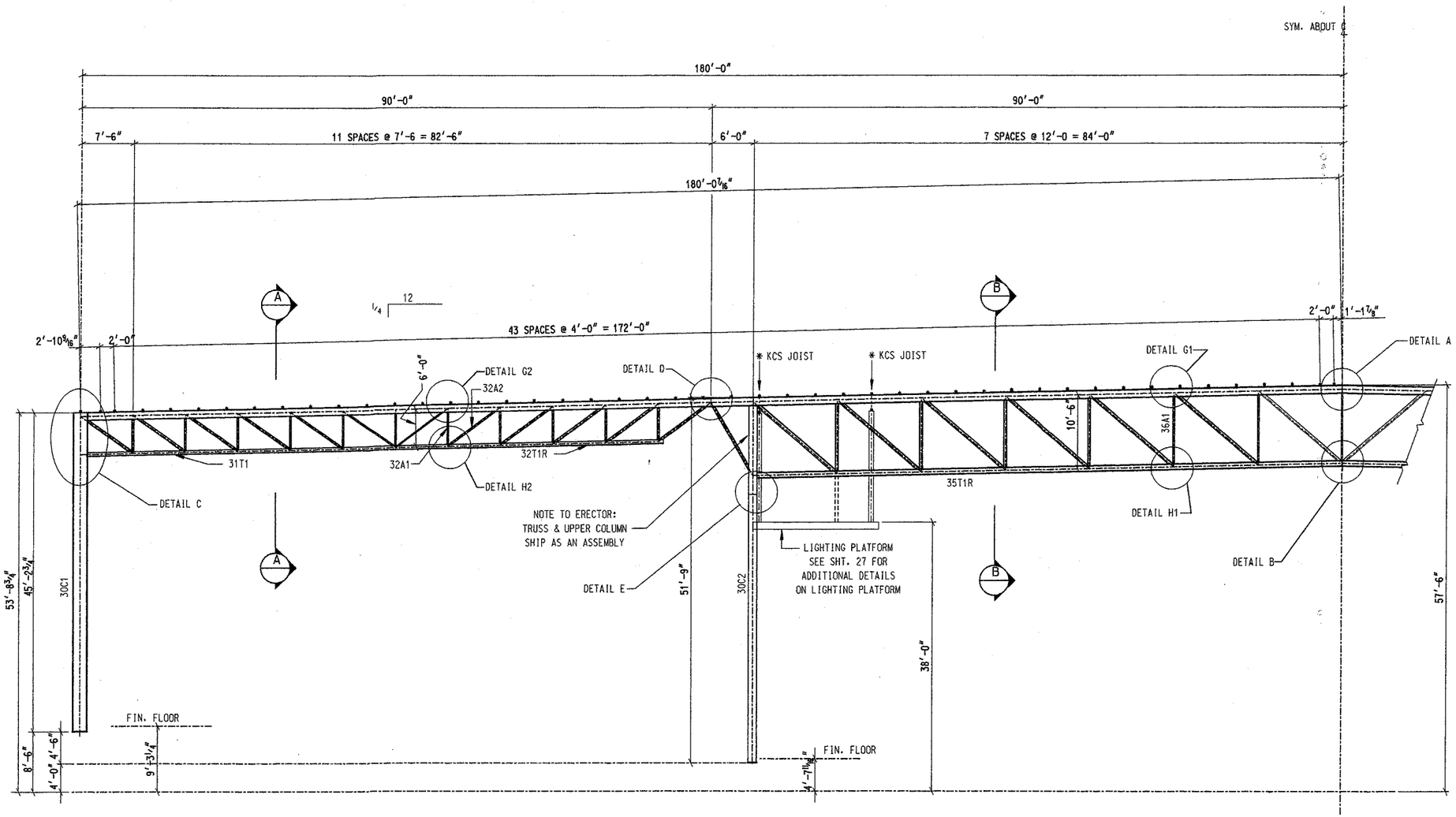

DETAIL	FIELD BOLTS
H2	(6) - 1" X 2 3/4" PER FLANGE
H2	(6) - 1" X 2 1/2" @ WEB
H1	(8) - 1" X 2 3/4" @ WEB
H1	(8) - 1" X 3 1/2" PER FLANGE

DETAIL	FIELD BOLTS
G2	(4) - 3/4" X 2" @ WEB
G2	(4) - 1" X 2 1/2" PER FLANGE
G1	(8) - 1" X 3 1/4" PER FLANGE
G1	(6) - 1" X 2 3/4" @ WEB

CROSS SECTION AT GRID LINE B

(LOOKING FROM THE STAGE)

FOR DETAILS NOT SHOWN
ON THIS DGN. SEE DGN. 13A

Approved for Construction

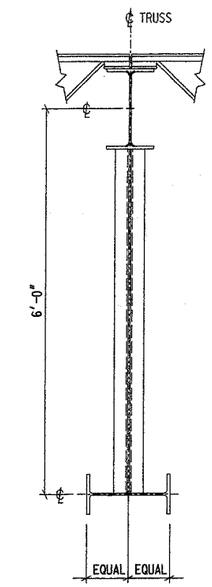

SECTION A-A

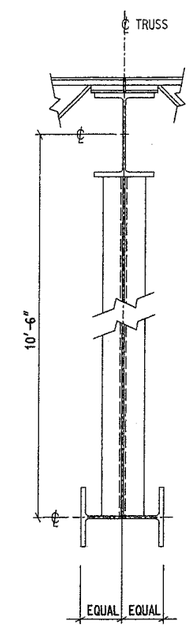

SECTION B-B

REVISION NO. 1	REVISION NO. 2							
DATE:	DATE:	BUTLER HEAVY STRUCTURES GENERAL OFFICES-KANSAS CITY, MISSOURI	BUILDER: SOUTHERN CONSTRUCTION SYSTEMS INCORPORATED	PROJECT: SOUTH FLORIDA FAIRGROUNDS AMPHITHEATER W. PALM BEACH, FLA.	BUILDING ORDER DESCRIPTION: CANOPY 30# LL + 3#CLL 110 MPH SBC 91	DRAWING TITLE: CROSS SECTION GRID LINE B DRAWING	GROUP: 7	AG FILE NO: DATE: 05/31/95
DRAWN BY:	DRAWN BY:						DRAWING NUMBER: D 95-95502-13	REV. 00
CHECKED BY:	CHECKED BY:							

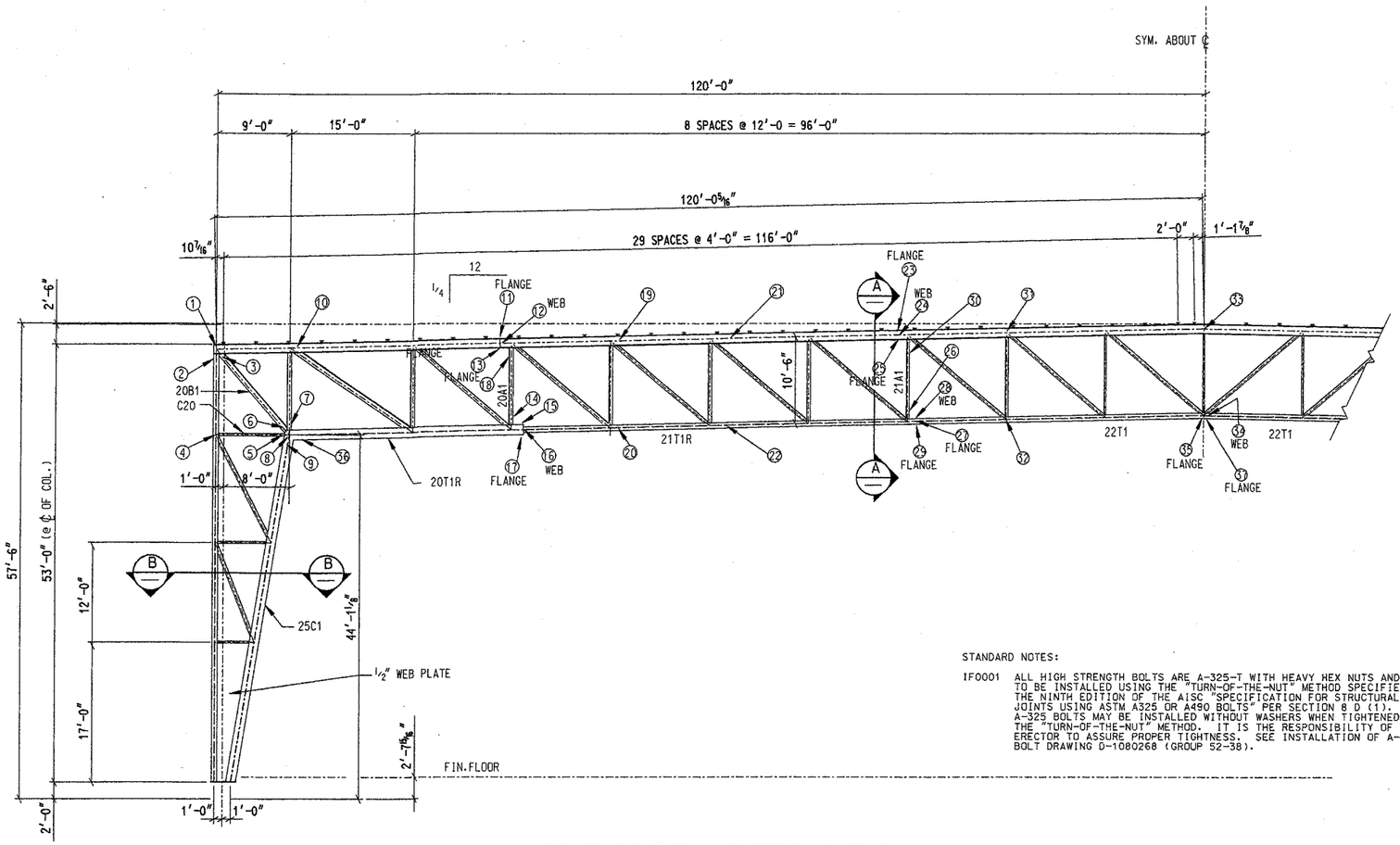

CROSS SECTION AT GRID LINE C

LOOKING FROM THE STAGE

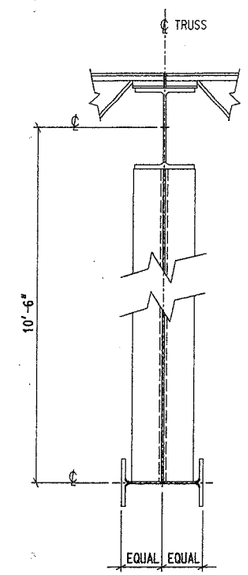

SECTION A-A

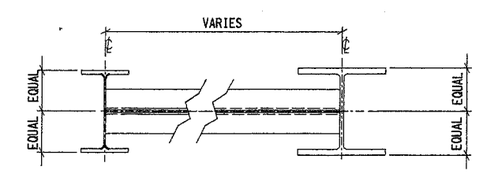

SECTION B-B

STANDARD NOTES:

IF0001 ALL HIGH STRENGTH BOLTS ARE A-325-T WITH HEAVY HEX NUTS AND ARE TO BE INSTALLED USING THE "TURN-OF-THE-NUT" METHOD SPECIFIED IN THE NINTH EDITION OF THE AISC "SPECIFICATION FOR STRUCTURAL JOINTS USING ASTM A325 OR A490 BOLTS" PER SECTION 8 D (1). A-325 BOLTS MAY BE INSTALLED WITHOUT WASHERS WHEN TIGHTENED BY THE "TURN-OF-THE-NUT" METHOD. IT IS THE RESPONSIBILITY OF THE ERECTOR TO ASSURE PROPER TIGHTNESS. SEE INSTALLATION OF A-325T BOLT DRAWING D-1080268 (GROUP 52-38).

BOLTED CONNECTION SCHEDULE

◯	QUANTITY	BOLT NO.	DESCRIPTION	NUT NO.	DETAIL
1	12		EDGE BEAM		
2	28		1 X 3 1/4 BOLT A325N		FLANGE
3	40		1 X 3 1/4 BOLT A325N		FLANGE
4	6		3/4 X 2 BOLT A325N		WEB
5	12		3/4 X 2 BOLT A325N		WEB
6	40		1 X 3 1/4 BOLT A325N		FLANGE
7			1 X 3 1/2 BOLT A325N		SHOP BOLTS
8			1 X 3 1/2 BOLT A325N		SHOP BOLTS
9	40		1 X 3 1/2 BOLT A325N		FLANGE
10	6		SWAY TRUSS B-C		
11	4		3/4 X 2 1/4 BOLT A325N		FLANGE
12	4		3/4 X 2 1/4 BOLT A325N		WEB
13	4		3/4 X 2 1/4 BOLT A325N		FLANGE

BOLTED CONNECTION SCHEDULE

◯	QUANTITY	BOLT NO.	DESCRIPTION	NUT NO.	DETAIL
14	5		1 x 3 BOLT A325		ANGLE
15	4		3/4 X 2 3/4 BOLT A325N		FLANGE
16	3		3/4 X 2 1/4 BOLT A325N		WEB
17	4		3/4 X 2 3/4 BOLT A325N		FLANGE
18	5		1 X 3 BOLT A325		ANGLE
19			SWAY TRUSS C-D		
20			SWAY TRUSS C-D		
21			SWAY TRUSS(BOTH)		
22			SWAY TRUSS(BOTH)		
23	12		1 X 3 BOLT A325		FLANGE
24	3		1 X 2 1/2 BOLT A325		WEB
25	12		1 X 3 BOLT A325		FLANGE
26	4		3/4 X 2 1/4 BOLT A325		ANGLE

BOLTED CONNECTION SCHEDULE

◯	QUANTITY	BOLT NO.	DESCRIPTION	NUT NO.	DETAIL
27	6		1 X 2 3/4 BOLT A325		FLANGE
28	6		1 X 2 1/4 BOLT A325		WEB
29	6		1 X 2 3/4 BOLT A325		FLANGE
30	4		3/4 X 2 1/4 BOLT A325		ANGLE
31	6		SWAY TRUSS (BOTH)		
32	4		SWAY TRUSS (BOTH)		
33	16		3/4 X 3 3/4 BOLT A325N		COMP. PLATE
34	8		1 X 2 1/2 BOLT A325		WEB
35	8		1 X 2 3/4 BOLT A325N		FLANGE
36	4		SWAY TRUSS B-C		
37	8		1 X 2 3/4 BOLTA325		FLANGE

Approved for Construction

REVISION NO. 1	REVISION NO. 2			BUILDER:	PROJECT:	BUILDING ORDER DESCRIPTION:	DRAWING TITLE:		AG FILE NO:
DATE:	DATE:	BUTLER BUTLER HEAVY STRUCTURES GENERAL OFFICES-KANSAS CITY, MISSOURI		SOUTHERN CONSTRUCTION SYSTEMS INCORPORATED	SOUTH FLORIDA FAIRGROUNDS AMPHITHEATER W. PALM BEACH, FLA.	CANOPY 30# LL + 3#CLL 110 MPH SBC 91	CROSS SECTION GRID LINE C DRAWING	GROUP: 7	DATE: 05/31/95
DRAWN BY:	DRAWN BY:							DRAWING NUMBER: D 95-95502-14	REV. 00
CHECKED BY:	CHECKED BY:								

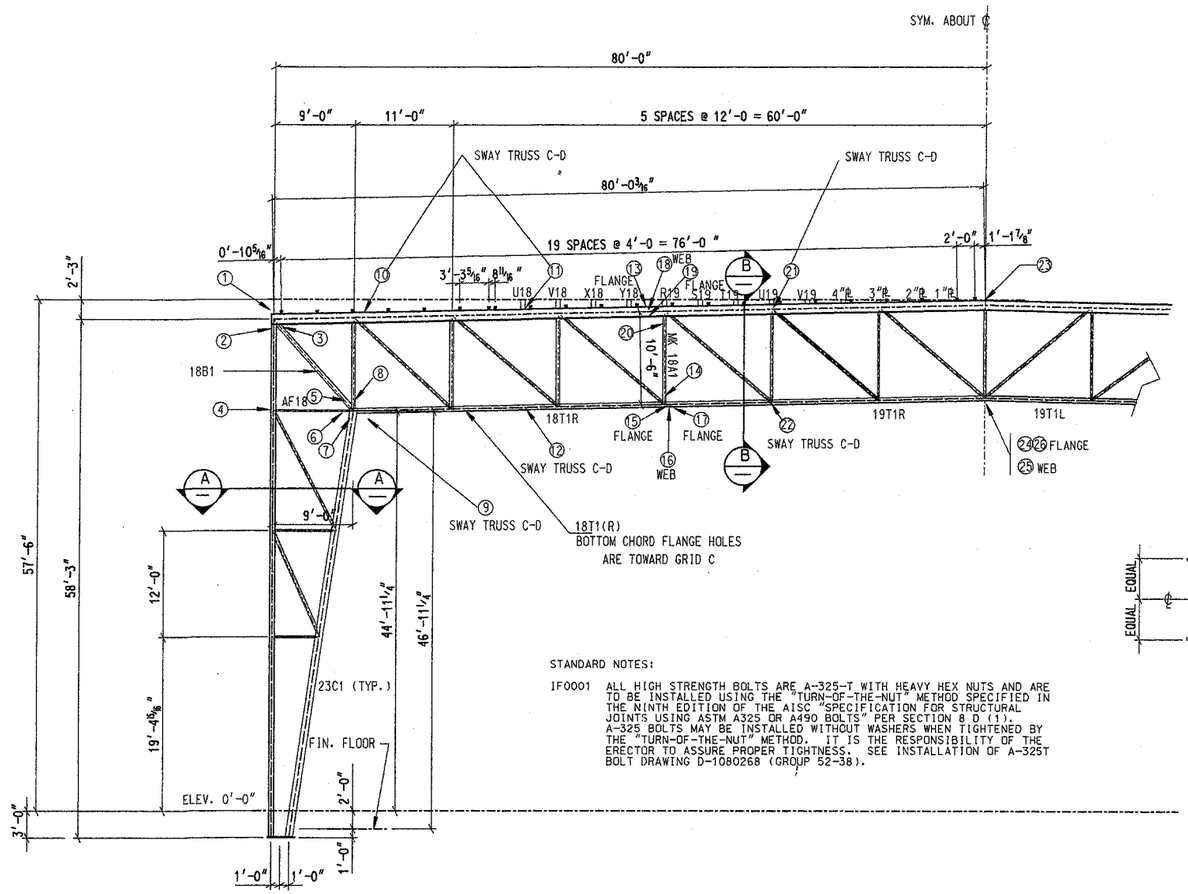

STANDARD NOTES:

1F0001 ALL HIGH STRENGTH BOLTS ARE A-325-T WITH HEAVY HEX NUTS AND ARE TO BE INSTALLED USING THE "TURN-OF-THE-NUT" METHOD SPECIFIED IN THE NINTH EDITION OF THE AISC "SPECIFICATION FOR STRUCTURAL JOINTS USING ASTM A325 OR A490 BOLTS" PER SECTION 8 D (1). A-325 BOLTS MAY BE INSTALLED WITHOUT WASHERS WHEN TIGHTENED BY THE "TURN-OF-THE-NUT" METHOD. IT IS THE RESPONSIBILITY OF THE ERECTOR TO ASSURE PROPER TIGHTNESS. SEE INSTALLATION OF A-325T BOLT DRAWING D-1080268 (GROUP 52-38).

CROSS SECTION AT GRID LINE D

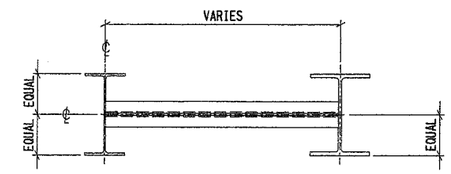

SECTION A-A

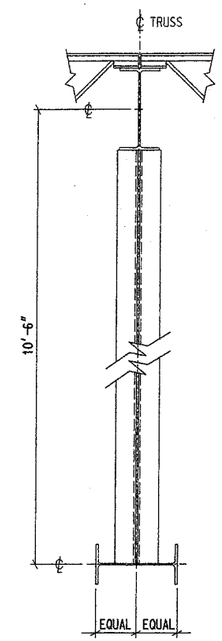

SECTION B-B

FIELD WORK NOTE:
W6 STUB SEATS FOR SUPPORT OF GRID IRON WILL SHIP LOOSE FOR FIELD WELDING TO TOP CHORD OF TRUSS AT D. SEE SHOP DWG. 18.18A, 19.19A FOR LOCATIONS

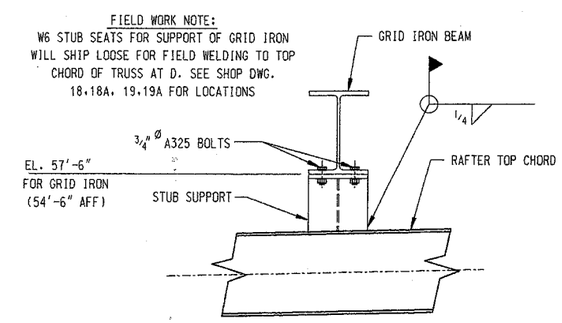

GRID IRON BEAM ATTACHMENT WITH STUB SUPPORT

BOLTED CONNECTION SCHEDULE					
○	QUANTITY	BOLT NO.	DESCRIPTION	NUT NO.	DETAIL
1			EDGE BEAM		
2	16		1 X 3 BOLT A325N		FLANGE
3	16		1 X 3 BOLT A325N		FLANGE
4	6		3/4 X 2 BOLT A325N		WEB
5	16		1 X 3 BOLT A325N		FLANGE
6	12		3/4 X 2 BOLT A325N		WEB
7	20		1 X 3 BOLT A325N		FLANGE
8	12		SHOP BOLTS		
9	4		SWAY TRUSS		
10	6		SWAY TRUSS		
11	6		SWAY TRUSS		
12	4		SWAY TRUSS		
13	8		3/4 X 2 BOLT A325N		TOP FLANGE

BOLTED CONNECTION SCHEDULE					
○	QUANTITY	BOLT NO.	DESCRIPTION	NUT NO.	DETAIL
14	3		3/4 X 2 1/4 BOLT A325N		ANGLE
15	8		3/4 X 2 BOLT A325N		FLANGE
16	8		3/4 X 2 1/4 BOLT A325N		WEB
17	8		3/4 X 2 BOLT A325N		FLANGE
18	8		3/4 X 2 BOLT A325N		WEB
19	8		3/4 X 2 BOLT A325N		BOTTOM FLG
20	3		3/4 X 2 1/4 BOLT A325N		ANGLE
21	6		SWAY TRUSS		
22	4		SWAY TRUSS		
23	8		3/4 X 2 3/4 BOLT A325N		CHORD
24	12		3/4 X 2 BOLT A325N		FLANGE
25	12		3/4 X 1 3/4 BOLT A325N		WEB
26	12		3/4 X 2 BOLT A325N		FLANGE

Approved for Construction

REVISION NO. 1	REVISION NO. 2		BUILDER:	PROJECT:	BUILDING ORDER DESCRIPTION:	DRAWING TITLE:		AG FILE NO:
DATE:	DATE:	BUTLER HEAVY STRUCTURES	SOUTHERN CONSTRUCTION SYSTEMS INCORPORATED	SOUTH FLORIDA FAIRGROUNDS AMPHITHEATER W. PALM BEACH, FLA.	CANOPY 30# LL + 3#CLL 110 MPH SBC 91	CROSS SECTION GRID LINE D DRAWING	GROUP: 7	DATE: 05/31/95
DRAWN BY:	DRAWN BY:	GENERAL OFFICES-KANSAS CITY, MISSOURI					DRAWING NUMBER: D 95-95502-15	REV. 00
CHECKED BY:	CHECKED BY:							

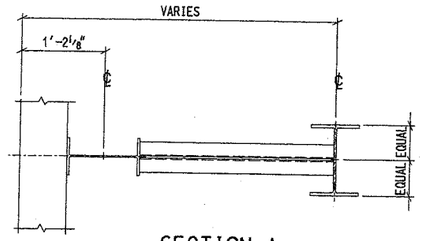

SECTION A

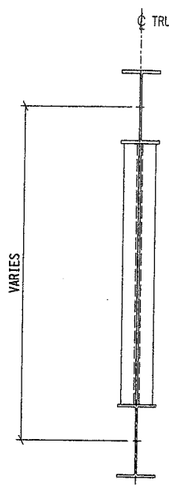

SECTION B

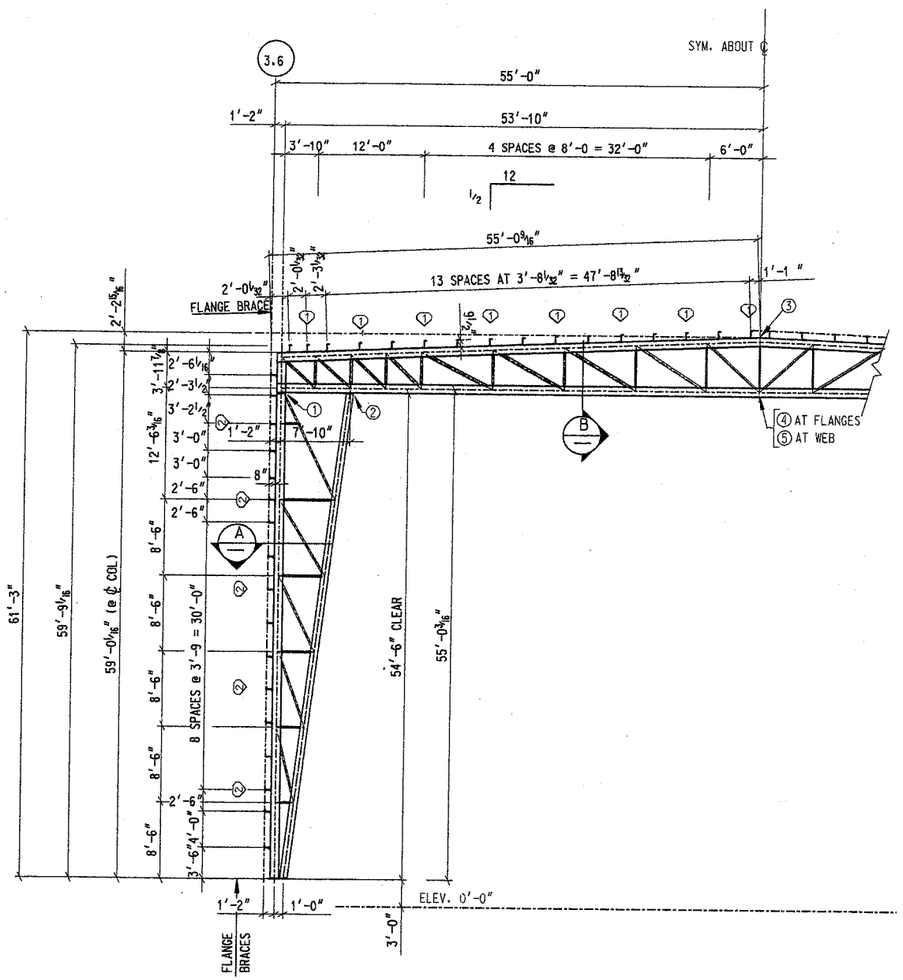

CROSS SECTION @ LINES E & F

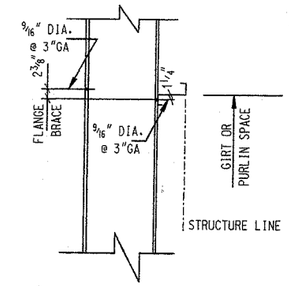

TYP. PUNCHING FOR GIRT, PURLIN & FLANGE BRACE

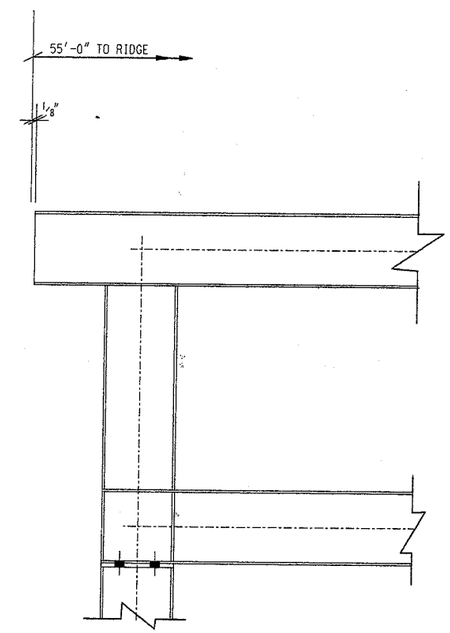

COLUMN TO BEAM CONNECTION

FLANGE BRACE SCHEDULE				
◇	PART NO.	DIM. "Y"	DETAIL	FIELD WORK △
1	005661	1'-4"	C003	
2	005661	1'-4"	C007	

BOLTED CONNECTION SCHEDULE					
○	QUANTITY	BOLT NO.	DESCRIPTION	NUT NO.	DETAIL
1	4		1 X 3 BOLT A325N		
2	4		1 X 3 BOLT A325N		
3	8		3/4 X 3 1/2 BOLT A325N		
4	8		1 X 2 3/4 BOLT A325N		
5	8		1 X 3 1/4 BOLT A325N		

STANDARD NOTES:

1F0001 ALL HIGH STRENGTH BOLTS ARE A-325-T WITH HEAVY HEX NUTS AND ARE TO BE INSTALLED USING THE "TURN-OF-THE-NUT" METHOD SPECIFIED IN THE NINTH EDITION OF THE AISC "SPECIFICATION FOR STRUCTURAL JOINTS USING ASTM A325 OR A490 BOLTS" PER SECTION 8 D (1). A-325 BOLTS MAY BE INSTALLED WITHOUT WASHERS WHEN TIGHTENED BY THE "TURN-OF-THE-NUT" METHOD. IT IS THE RESPONSIBILITY OF THE ERECTOR TO ASSURE PROPER TIGHTNESS. SEE INSTALLATION OF A-325T BOLT DRAWING D-1080268 (GROUP 52-38).

RELEASED FOR CONSTRUCTION
10-31-95 (DATE) (INIT)
DESTROY ALL PREVIOUS COPIES
PHASE I FINAL

Approved for Construction

REVISION NO. 1		REVISION NO. 2								
DATE:		DATE:		BUTLER HEAVY STRUCTURES	BUILDER:	PROJECT:	BUILDING ORDER DESCRIPTION:	DRAWING TITLE:		AG FILE NO:
DRAWN BY:		DRAWN BY:		GENERAL OFFICES-KANSAS CITY, MISSOURI	SOUTHERN CONSTRUCTION SYSTEMS INCORPORATED	SOUTH FLORIDA FAIRGROUNDS AMPHITHEATER W. PALM BEACH, FLA.	STAGE 30# LL + 3#CLL 110 MPH SBC 91	CROSS SECTION GRID LINES E & F DRAWING	GROUP: 7	DATE: 05/31/95
CHECKED BY:		CHECKED BY:							DRAWING NUMBER: D 95-95502-16	REV. 00

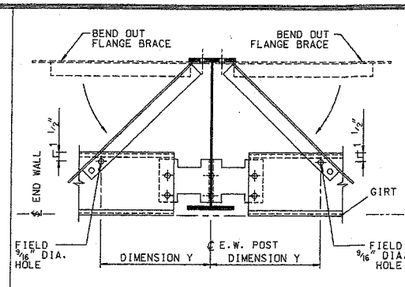

USE (4) 1/2" X 1 1/4" HEX. BOLT (095085) AND 1/2" HEX. NUT (095032)

DETAIL C021	DOUBLE FLANGE BRACE CONNECTION FOR STRAIGHT COLUMNS GREATER THAN 12" DEEP

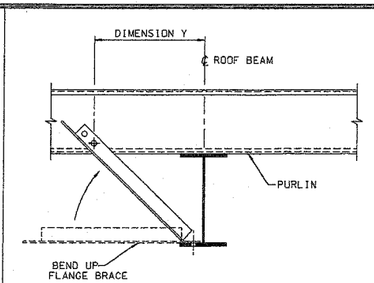

USE (2) 1/2" X 1 1/4" HEX. BOLT (095085) AND 1/2" HEX. NUT (095032)

DETAIL C001	SINGLE FLANGE BRACE CONNECTION USE FIRST HOLE AT PURLIN CONNECTION

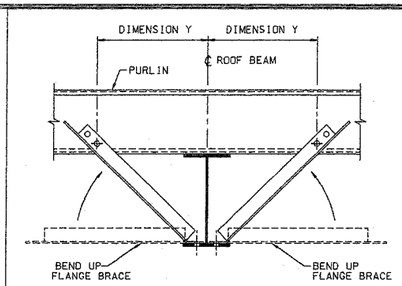

USE (4) 1/2" X 1 1/4" HEX. BOLT (095085) AND 1/2" HEX. NUT (095032)

DETAIL C003	DOUBLE FLANGE BRACE CONNECTION USE FIRST HOLE AT PURLIN CONNECTION

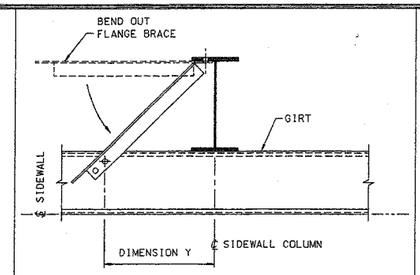

USE (2) 1/2" X 1 1/4" HEX. BOLT (095085) AND 1/2" HEX. NUT (095032)

DETAIL C007	SINGLE FLANGE BRACE CONNECTION USE FIRST HOLE AT SIDEWALL GIRT CONNECTION

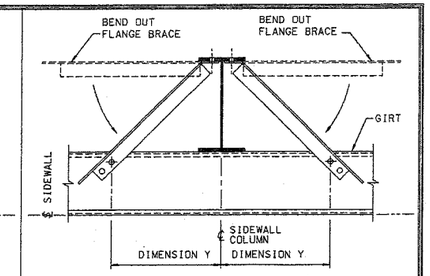

USE (4) 1/2" X 1 1/4" HEX. BOLT (095085) AND 1/2" HEX. NUT (095032)

DETAIL C009	DOUBLE FLANGE BRACE CONNECTION USE FIRST HOLE AT SIDEWALL GIRT CONNECTION

RELEASED FOR CONSTRUCTION
10-31-95 (DATE) (INIT)
DESTROY ALL PREVIOUS COPIES
PHASE II FINAL

Approved for Construction

REVISION NO. 1	REVISION NO. 2		BUILDER:	PROJECT:	BUILDING ORDER DESCRIPTION:	DRAWING TITLE:		AG FILE NO:
DATE:	DATE:	BUTLER HEAVY STRUCTURES	SOUTHERN CONSTRUCTION SYSTEMS INCORPORATED	SOUTH FLORIDA FAIRGROUNDS AMPHITHEATER W. PALM BEACH, FLA.	STAGE 30# LL + 3# CLL 110 MPH SBC 91	CROSS SECTION DETAILS DRAWING	GROUP: 7	DATE: 05/08/95
DRAWN BY:	DRAWN BY:	GENERAL OFFICES-KANSAS CITY, MISSOURI					DRAWING NUMBER:	REV.
CHECKED BY:	CHECKED BY:						D 95-95502-16A	00

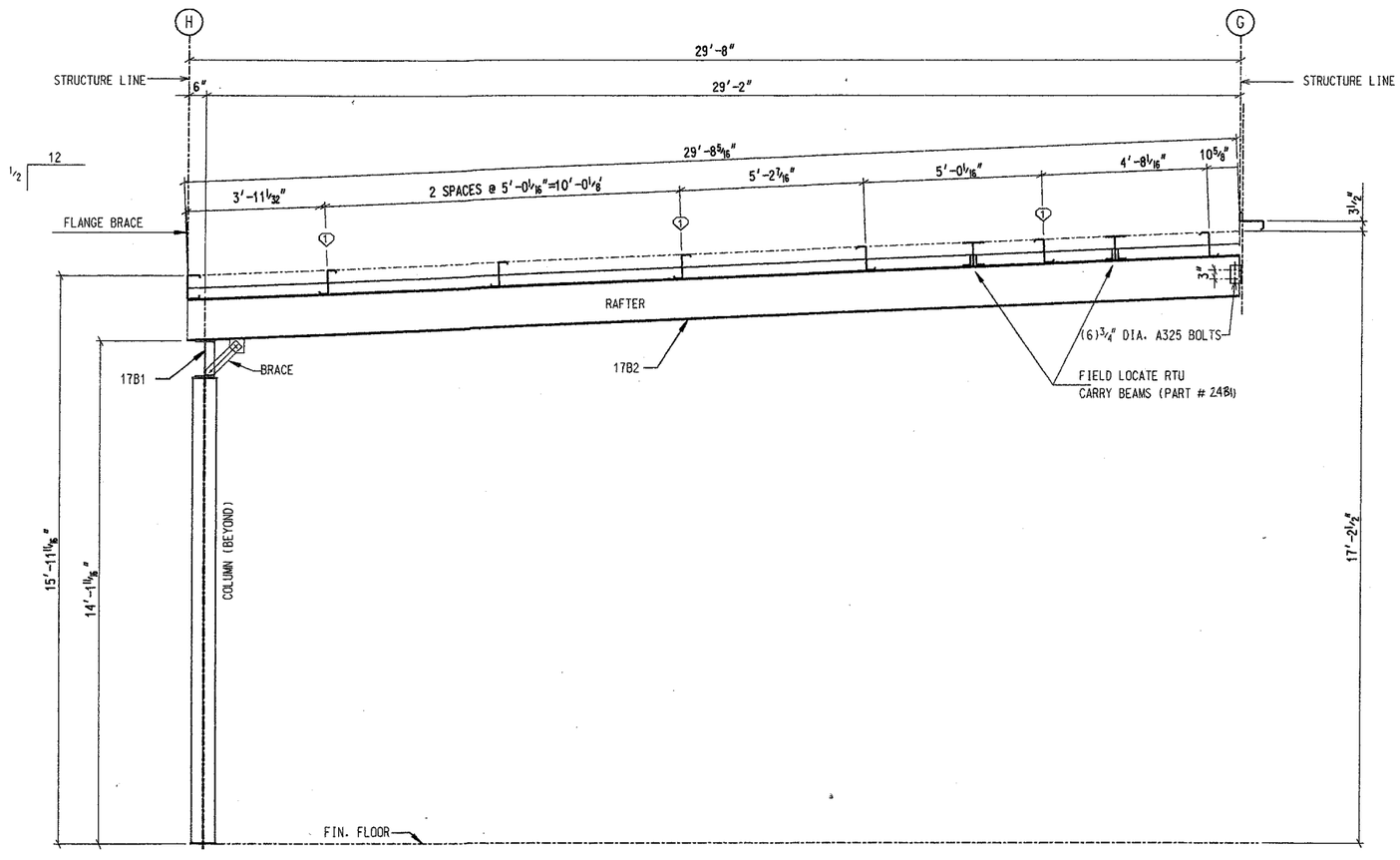

CROSS SECTION AT DOCK AREA

GRID LINES 3.2, 3.3, 3.4, & 3.5

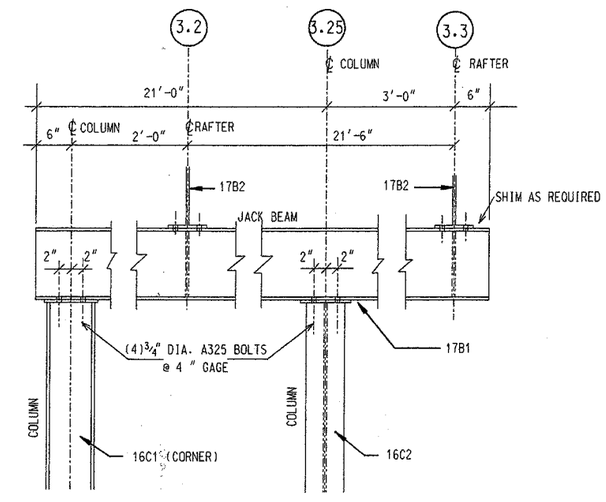

ELEVATION @ SIDEWALL - GRID H

LEFT END AS SHOWN
RIGHT END OPPOSITE HAND

FLANGE BRACE SCHEDULE					
	⬡	PART NO.	DIM. "Y"	DETAIL	FIELD WORK △
@ 3.3 & 3.4	1	005661	1'-4"	C009	
@ 3.2 & 3.5	1	005661	1'-4"	C007	

STANDARD NOTES:

IF0001 ALL HIGH STRENGTH BOLTS ARE A-325-T WITH HEAVY HEX NUTS AND ARE TO BE INSTALLED USING THE "TURN-OF-THE-NUT" METHOD SPECIFIED IN THE NINTH EDITION OF THE AISC "SPECIFICATION FOR STRUCTURAL JOINTS USING ASTM A325 OR A490 BOLTS" PER SECTION 8 D (1). A-325 BOLTS MAY BE INSTALLED WITHOUT WASHERS WHEN TIGHTENED BY THE "TURN-OF-THE-NUT" METHOD. IT IS THE RESPONSIBILITY OF THE ERECTOR TO ASSURE PROPER TIGHTNESS. SEE INSTALLATION OF A-325T BOLT DRAWING D-1080268 (GROUP 52-38).

Approved for Construction

REVISION NO. 1		REVISION NO. 2								
DATE:		DATE:		BUTLER HEAVY STRUCTURES	BUILDER:	PROJECT:	BUILDING ORDER DESCRIPTION:	DRAWING TITLE:		AG FILE NO:
DRAWN BY:		DRAWN BY:		GENERAL OFFICES-KANSAS CITY, MISSOURI	SOUTHERN CONSTRUCTION SYSTEMS INCORPORATED	SOUTH FLORIDA FAIRGROUNDS AMPHITHEATER W. PALM BEACH, FLA.	DOCK 30# LL + 3#CLL 110 MPH SBC 91	CROSS SECTION DOCK AREA DRAWING	GROUP: 7	DATE: 05/31/95
CHECKED BY:		CHECKED BY:							DRAWING NUMBER: D 95-95502-17	REV. 00

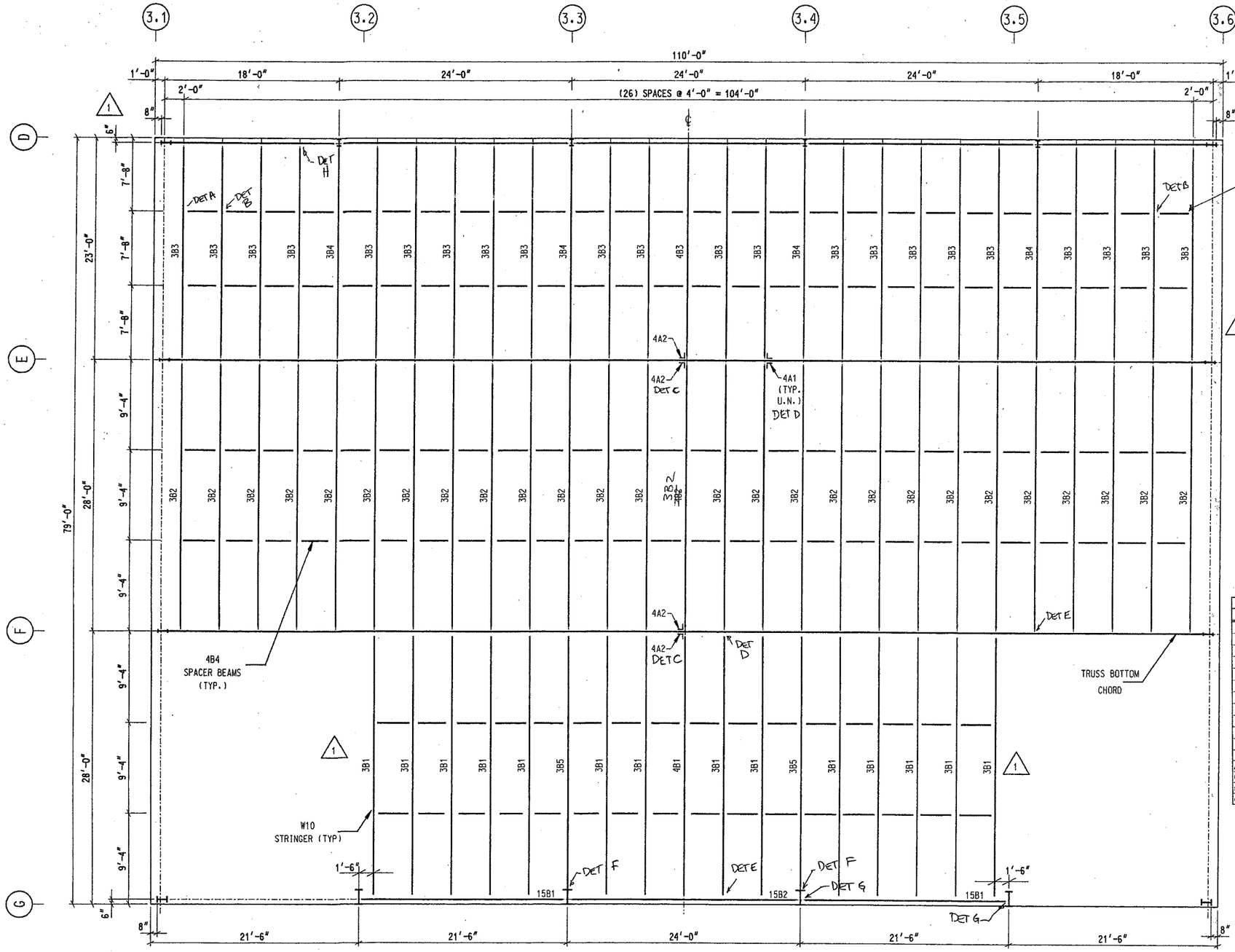

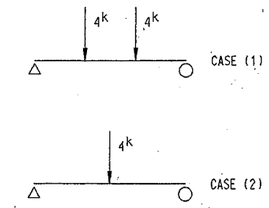

STRINGER LOADING CONDITIONS

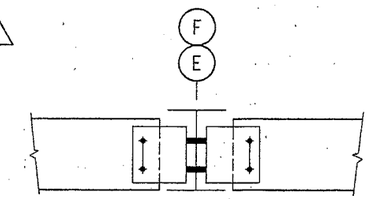

LONG SINGLE ANGLE CONNECTION
MAX VERTICAL REACTION 4 KIPS

Detail	Description	Clip angle	Bolt qty	Bolt size
A	Spacer end conn.	N/A	2	3/4 x 1 3/4
B	Spacer interm.conn.	N/A	2	3/4 x 2 1/4
C	Ridge angle to chord splice	4A2	4	1 x 3 1/4
C	Center stringer to angle	4A2	2	3/4 x 2
D	Typ interm. angle to chord	4A1	2	3/4 x 2 1/2
D	Typical stringer to angle	4A1	2	3/4 x 2
E	Typical end angle to chord	4A1	2	3/4 x 2
E	Typical stringer to angle	4A1	2	3/4 x 2
F	Stringer to EW Column	N/A	4	3/4 x 2 1/4
G	Edge beam at G to Column	N/A	6	3/4 x 2 1/4
H	Stringer to stub post at D	N/A	4	3/4 x 2

All bolts above are in "Bearing Only" connections.
Clip angles were sized to be bolted to the trusses prior to erection, so that gridiron stringers could be lifted into position and bolted to the clip angles.

RELEASED FOR CONSTRUCTION
10-31-95 (DATE) (INIT)
DESTROY ALL PREVIOUS COPIES
PHASE 3 FINAL

GRID IRON PLAN

Approved for Construction

REVISION NO. 1		REVISION NO. 2								
DATE: 10-6-1995	REMOVED STRINGER & SPACER BEAMS	DATE: 11-2-95	Changed 4B2 to 3B2	BUTLER HEAVY STRUCTURES	BUILDER: SOUTHERN CONSTRUCTION SYSTEMS INCORPORATED	PROJECT: SOUTH FLORIDA FAIRGROUNDS AMPHITHEATER W. PALM BEACH, FLA.	BUILDING ORDER DESCRIPTION: STAGE 30# LL + 3#CLL 110 MPH SBC 91	DRAWING TITLE: GRID IRON PLAN	GROUP: 7	AG FILE NO:
DRAWN BY: JBH		DRAWN BY: CMO							DATE: 05/31/95	
CHECKED BY: BD		CHECKED BY:		GENERAL OFFICES-KANSAS CITY, MISSOURI					DRAWING NUMBER: D 95-95502-18	REV. 02

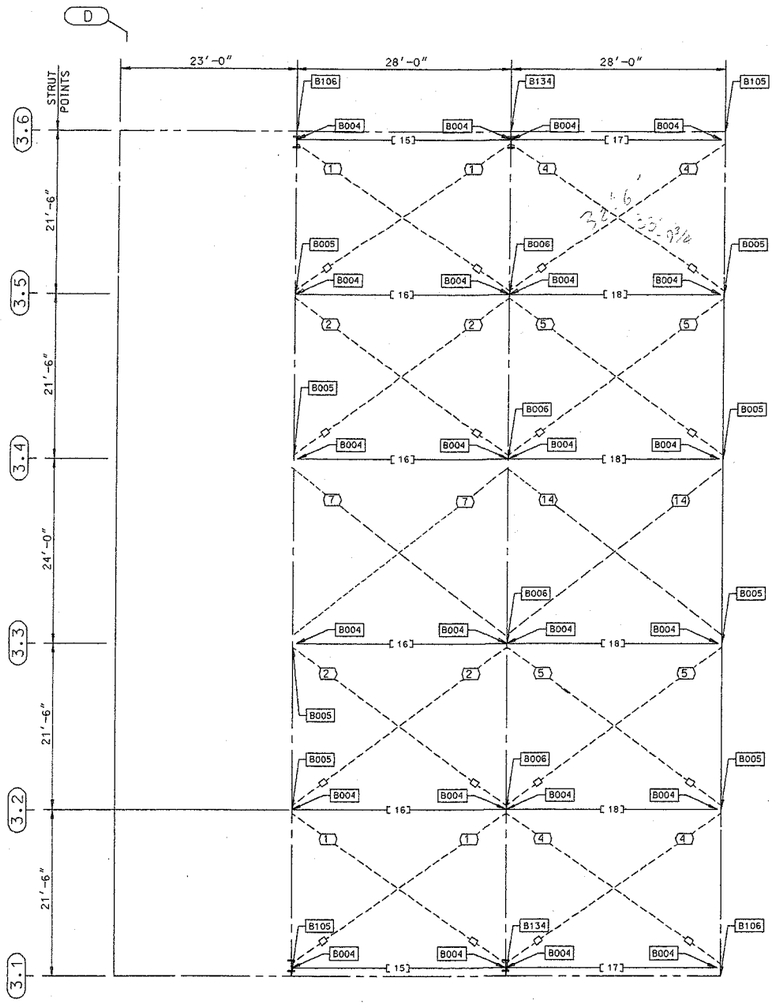

STAGE ROOF BRACING

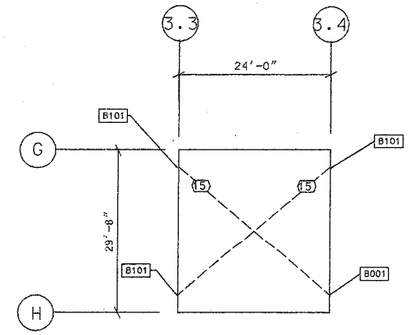

DOCK ROOF BRACING

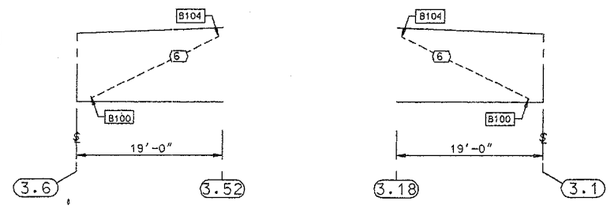

STAGE ENDWALL BRACING AT GRID D

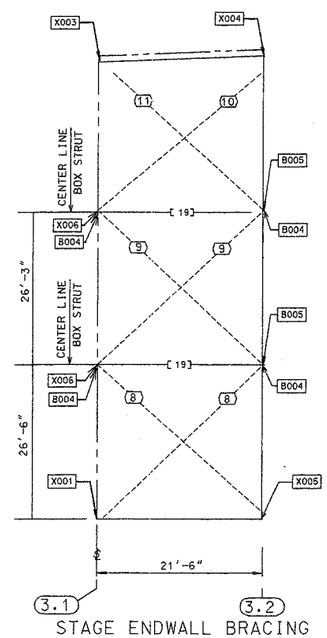

STAGE ENDWALL BRACING AT GRID G

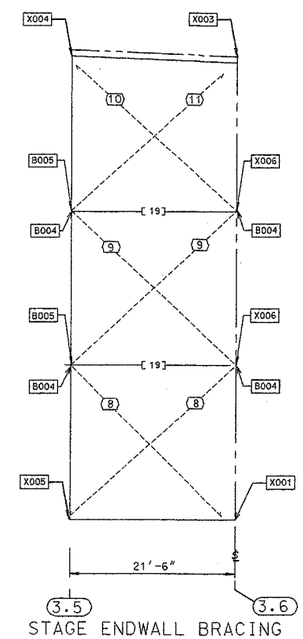

STAGE ENDWALL BRACING AT GRID G

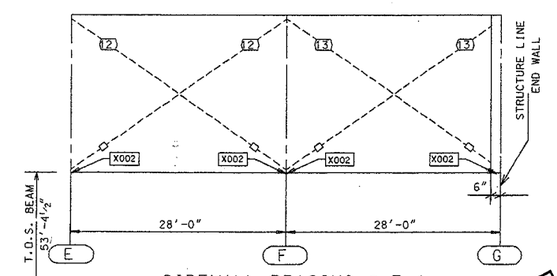

SIDEWALL BRACING @ 3.1
REVERSE @ 3.6

BRACE ROD SCHEDULE				
⬭	PART NUMBER	DESCRIPTION	THREAD	TURNBUCKLE
1	544053 -240	1¼" BRACE ROD	RH-RH	095274
	544063 -152	(157) 1¼" BRACE ROD	RH-LH	
2	544053 -240	1¼" BRACE ROD	RH-RH	095274
	544063 -158	1¼" BRACE ROD	RH-LH	
4	544053 -240	1¼" BRACE ROD	RH-RH	095274
	544063 -147	(152) 1¼" BRACE ROD	RH-LH	
5	544053 -240	1¼" BRACE ROD	RH-RH	095274
	544063 -153	1¼" BRACE ROD	RH-LH	
6	544046 -197	7/16" BRACE ROD	RH-RH	NONE
7	544053 -240	1¼" BRACE ROD	RH-RH	095274
	544063 -178	1¼" BRACE ROD	RH-LH	
8	544053-240	1¼" BRACE ROD	RH-RH	095274
	544063-110	(120) 1¼" BRACE ROD	RH-LH	
9	544053 -240	1¼" BRACE ROD	RH-RH	095274
	544063-124	1¼" BRACE ROD	RH-LH	
10	544049 -180	¾" BRACE ROD	RH-RH	095047
	544059 -39	¾" BRACE ROD	RH-LH	
11	544049 -180	¾" BRACE ROD	RH-RH	095047
	544059 -41	¾" BRACE ROD	RH-LH	
12	544053 -240	1¼" BRACE ROD	RH-RH	095274
	544063 -44	1¼" BRACE ROD	RH-LH	
13	544053 -240	1¼" BRACE ROD	RH-RH	095274
	544063 -39	1¼" BRACE ROD	RH-LH	
14	544053 -240	1¼" BRACE ROD	RH-RH	095274
	544063 -172	1¼" BRACE ROD	RH-LH	
15	544047 -454	½" BRACE ROD	RH-RH	NONE

( ) SHOWS REQUIRED LENGTH

PART SCHEDULE				
[ ]	PART NAME	PART NUMBER	PART LENGTH	FIELD WORK △
15	BOX STRUT	544073-325-5	27'-1⅝"	
16	BOX STRUT	544073-333-6	27'-9¾"	
17	BOX STRUT	544073-319-5	26'-7⅝"	
18	BOX STRUT	544072-327-6	27'-3¾"	
19	BOX STRUT	544071-229-6	19'-1¾"	

RELEASED FOR CONSTRUCTION
10-31-95 (DATE) (INIT)
DESTROY ALL PREVIOUS COPIES
PHASE II FINAL

Approved for Construction

REVISION NO. 1	REVISION NO. 2							
DATE:	DATE:	BUTLER HEAVY STRUCTURES GENERAL OFFICES-KANSAS CITY, MISSOURI	BUILDER: SOUTHERN CONSTRUCTION SYSTEMS INCORPORATED	PROJECT: SOUTH FLORIDA FAIRGROUNDS AMPHITHEATER W. PALM BEACH, FLA.	BUILDING ORDER DESCRIPTION: STAGE 30# LL + 3#CLL 110 MPH SBC 91	DRAWING TITLE: WIND BRACING DRAWING	GROUP: 7	AG FILE NO: DATE: 05/31/95
DRAWN BY:	DRAWN BY:						DRAWING NUMBER: D 95-95502-21	REV. 00
CHECKED BY:	CHECKED BY:							

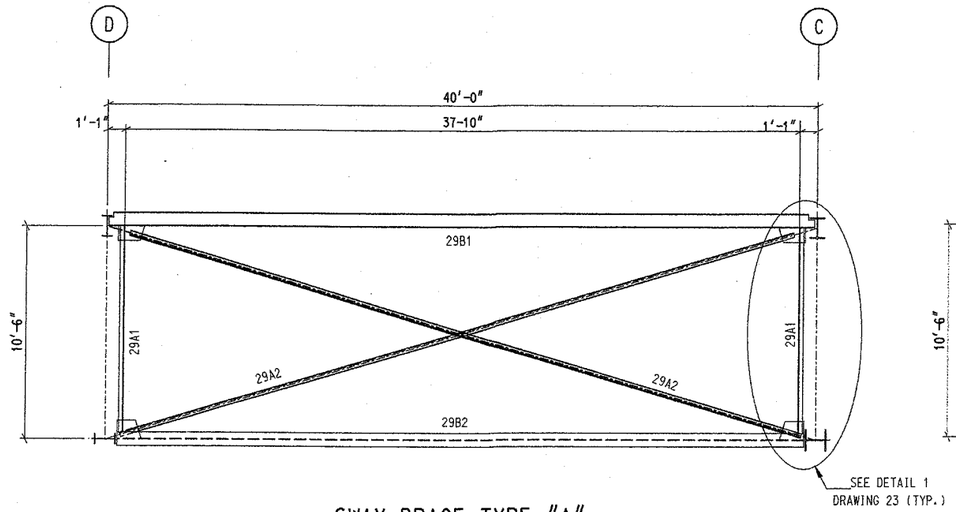

SWAY BRACE TYPE "A"

6 REQ'D

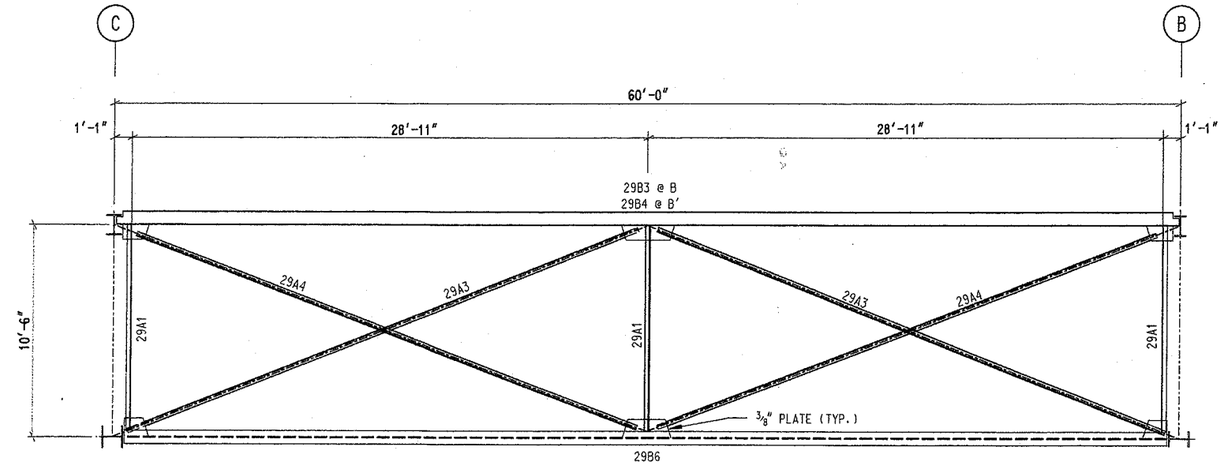

SWAY BRACE TYPE "B"

4 REQ'D

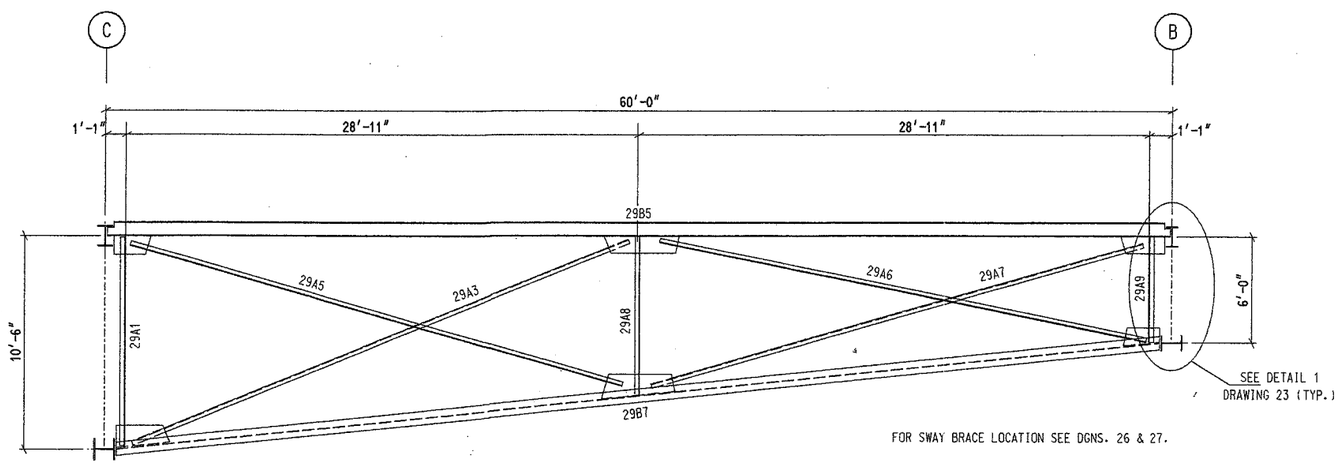

FOR SWAY BRACE LOCATION SEE DGNS. 26 & 27.

SWAY BRACE TYPE "C"

2 REQ'D

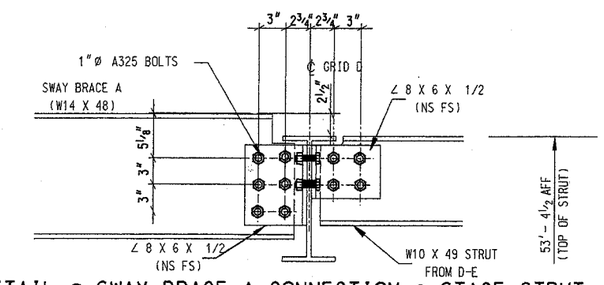

DETAIL @ SWAY BRACE A CONNECTION @ STAGE STRUT

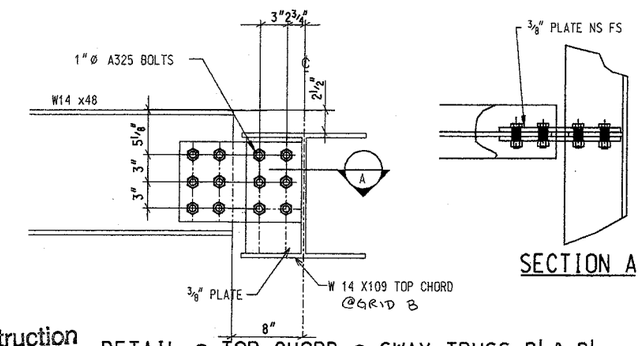

SECTION A

DETAIL @ TOP CHORD @ SWAY TRUSS B' & D'

Approved for Construction

REVISION NO. 1	REVISION NO. 2		BUILDER:	PROJECT:	BUILDING ORDER DESCRIPTION:	DRAWING TITLE:		AG FILE NO:
DATE:	DATE:	BUTLER BUTLER HEAVY STRUCTURES GENERAL OFFICES-KANSAS CITY, MISSOURI	SOUTHERN CONSTRUCTION SYSTEMS INCORPORATED	SOUTH FLORIDA FAIRGROUNDS AMPHITHEATER W. PALM BEACH. FLA.	CANOPY 30# LL + 3#CLL 110 MPH SBC 91	SWAY BRACE DETAILS	GROUP: 7	DATE: 05/31/95
DRAWN BY:	DRAWN BY:						DRAWING NUMBER:	REV.
CHECKED BY:	CHECKED BY:						D 95-95502-22	00

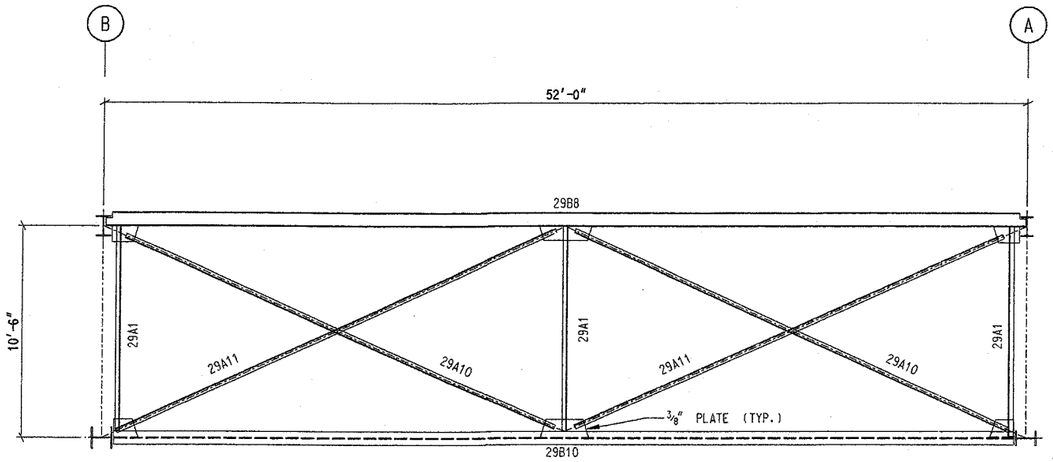

SWAY BRACE TYPE "D"

6 REQ'D

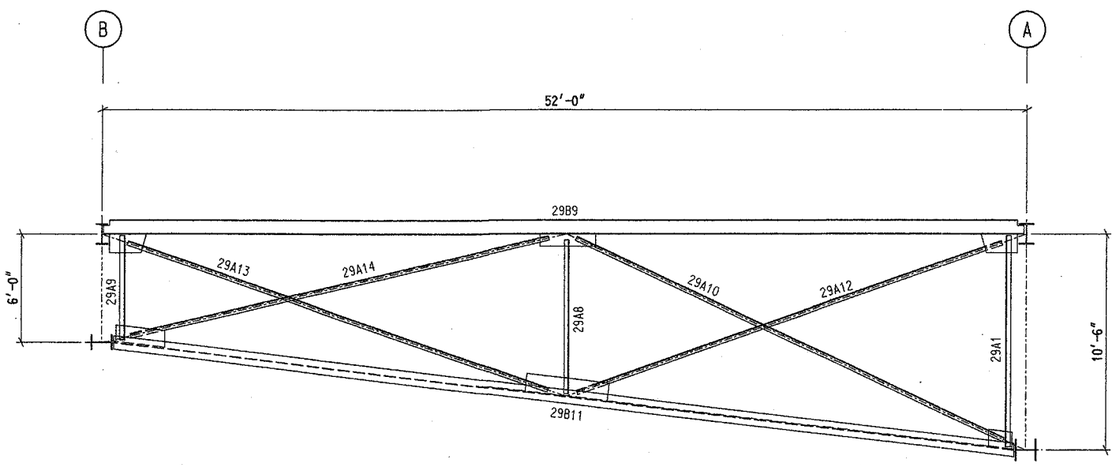

SWAY BRACE TYPE "E"

2 REQ'D

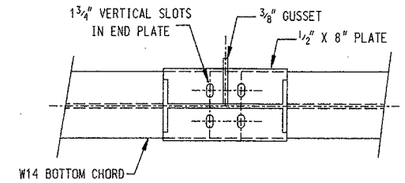

SECTION A

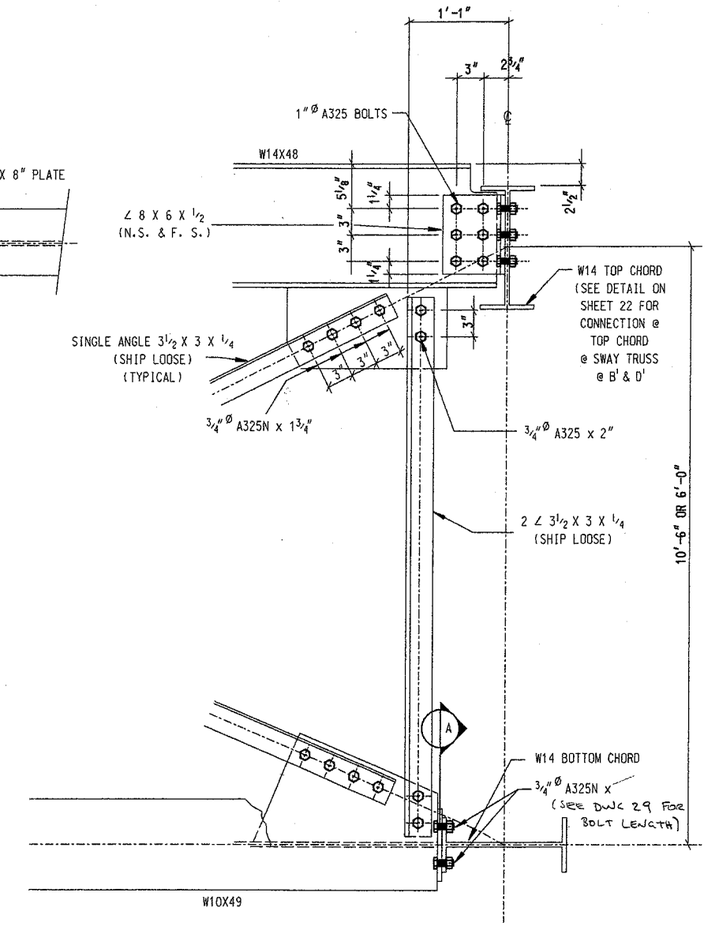

DETAIL 1 @ SWAY TRUSS A, B, C, & D

DGN. 22

FOR SWAY BRACE LOCATION SEE DRAWINGS 26 & 27

Approved for Construction

REVISION NO. 1	REVISION NO. 2			BUILDER:	PROJECT:	BUILDING ORDER DESCRIPTION:	DRAWING TITLE:		AG FILE NO:
DATE:	DATE:	BUTLER BUTLER HEAVY STRUCTURES GENERAL OFFICES-KANSAS CITY, MISSOURI		SOUTHERN CONSTRUCTION SYSTEMS INCORPORATED	SOUTH FLORIDA FAIRGROUNDS AMPHITHEATER W. PALM BEACH, FLA.	CANOPY 30# LL + 3#CLL 110 MPH SBC 91	SWAY BRACE DETAILS	GROUP: 7	DATE: 05/31/95
DRAWN BY:	DRAWN BY:							DRAWING NUMBER:	REV.
CHECKED BY:	CHECKED BY:							D 95-95502-23	00

ROD DIA.	NUT	WASHERS A	WASHERS B	WASHERS C
7/16"	095083	095133	095165	020821
1/2"	095032	095133	095165	020821
5/8"	095231	095298	095165	020821
3/4"	095235	095264	095948	020822
7/8"	095237	095264	095948	020822

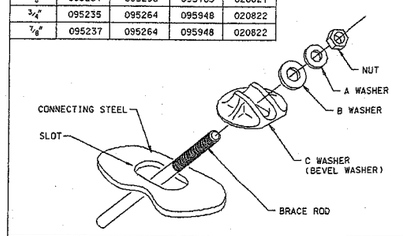

DETAIL B001 — TYPICAL BEVEL WASHER CONNECTION

ROD DIA.	CLEVIS ASSY.
5/8"	095277
3/4"	095278
7/8"	095279
1"	095280
1 1/8"	095281
1 1/4"	095282

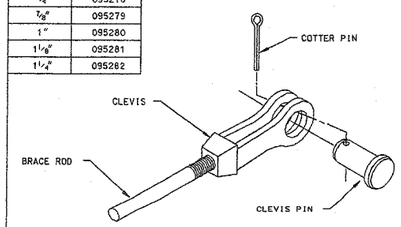

DETAIL B002 — TYPICAL CLEVIS CONNECTION

ROD DIA.	NUT	WASHER
7/16"	095083	095133
1/2"	095032	095133
5/8"	095231	095298

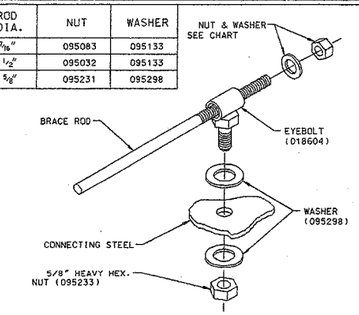

DETAIL B003 — TYPICAL EYEBOLT CONNECTION

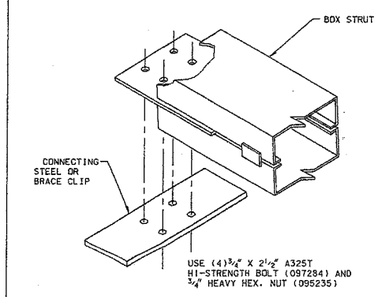

DETAIL B004 — TYPICAL BOX STRUT CONNECTION

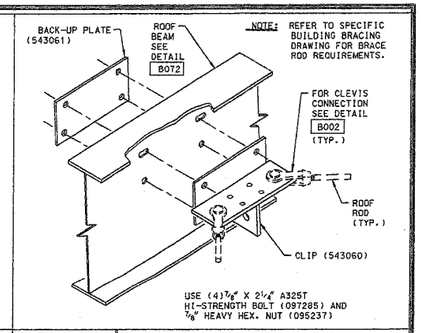

DETAIL B005 — BRACING CLIP CONNECTION INTERMEDIATE LOCATION

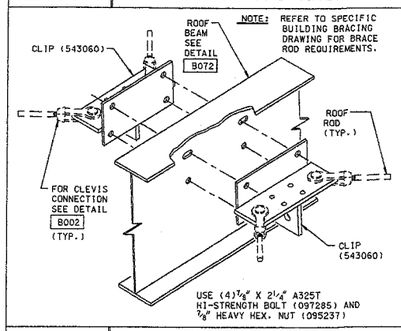

DETAIL B006 — BRACING CLIP CONNECTION BACK-TO-BACK AT INTERMEDIATE LOCATION

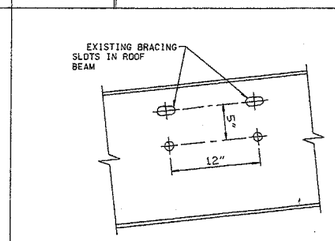

NOTE: IN SOME ROOF BEAMS THESE (2) LOWER 15/16" DIA. HOLES WILL NEED TO BE FIELD LOCATED AS SHOWN.

DETAIL B072 — FIELD WORK ON ROOF BEAM FOR BRACING CLIP AT INTERMEDIATE LOCATIONS

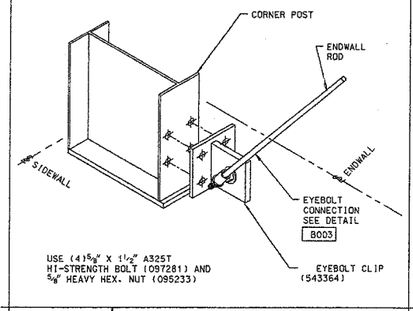

DETAIL B100 — LOWER EYEBOLT CONNECTION BRACED EW AT CORNER POST

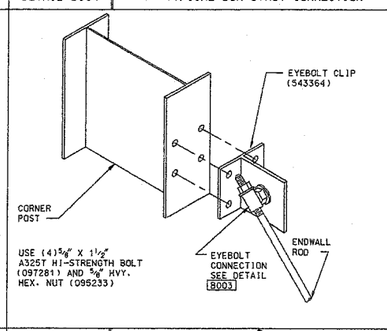

DETAIL B102 — UPPER EYEBOLT CONNECTION BRACED EW AT CORNER POST

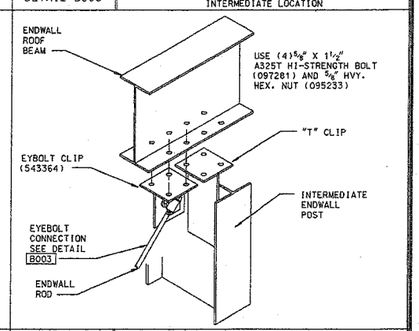

DETAIL B104 — UPPER EYBOLT CONNECTION TO ENDWALL ROOF BEAM

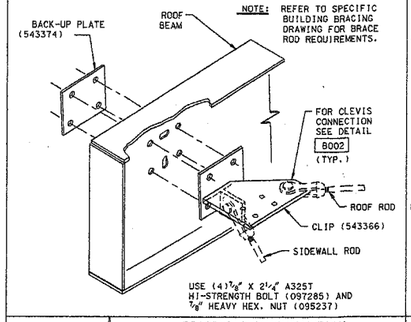

DETAIL B105 — BRACING CLIP CONNECTION LOW EAVE LOCATION-LOW SLOPE RANGE

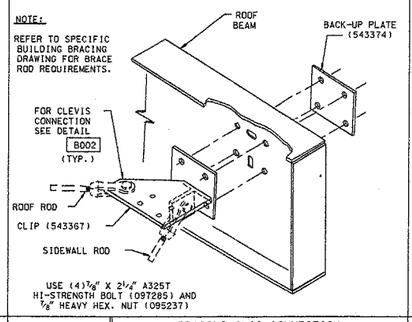

DETAIL B106 — BRACING CLIP CONNECTION LOW EAVE LOCATION-LOW SLOPE RANGE

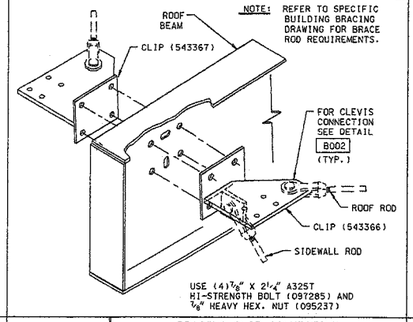

DETAIL B134 — BRACING CLIP CONNECTION LOW EAVE LOCATION-LOW SLOPE RANGE

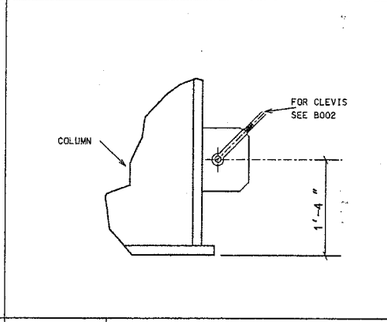

DETAIL X001

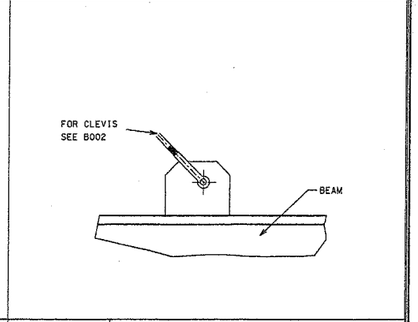

DETAIL X002

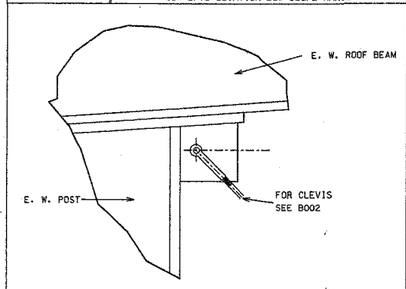

DETAIL X003

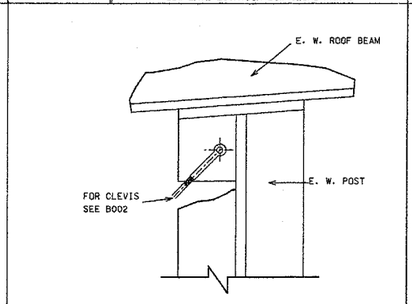

DETAIL X004

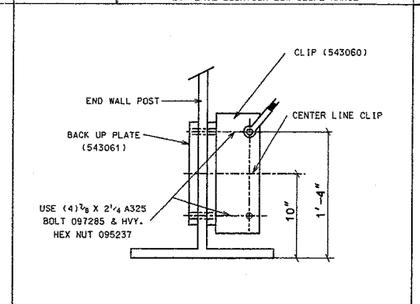

DETAIL X005

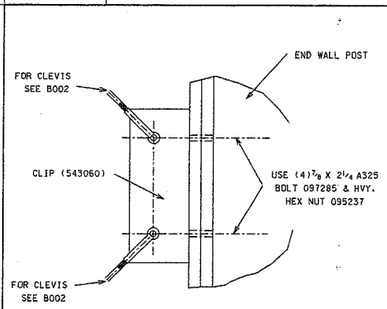

DETAIL X006

Approved for Construction

RELEASED FOR CONSTRUCTION
(DATE) (INIT)
DESTROY ALL PREVIOUS COPIES
PHASE FINAL

REVISION NO. 1	REVISION NO. 2		BUILDER:	PROJECT:	BUILDING ORDER DESCRIPTION:	DRAWING TITLE:		AG FILE NO:
DATE:	DATE:	BUTLER BUTLER HEAVY STRUCTURES GENERAL OFFICES-KANSAS CITY, MISSOURI	SOUTHERN CONSTRUCTION SYSTEMS INCORPORATED	SOUTH FLORIDA FAIRGROUNDS AMPHITHEATER W. PALM BEACH, FLA.	STAGE 30# LL + 3#CLL 110 MPH SBC 91	WIND BRACING DETAIL	GROUP: 7	DATE: 05/31/95
DRAWN BY:	DRAWN BY:						DRAWING NUMBER: D 95-95502- 24	REV. 00
CHECKED BY:	CHECKED BY:							

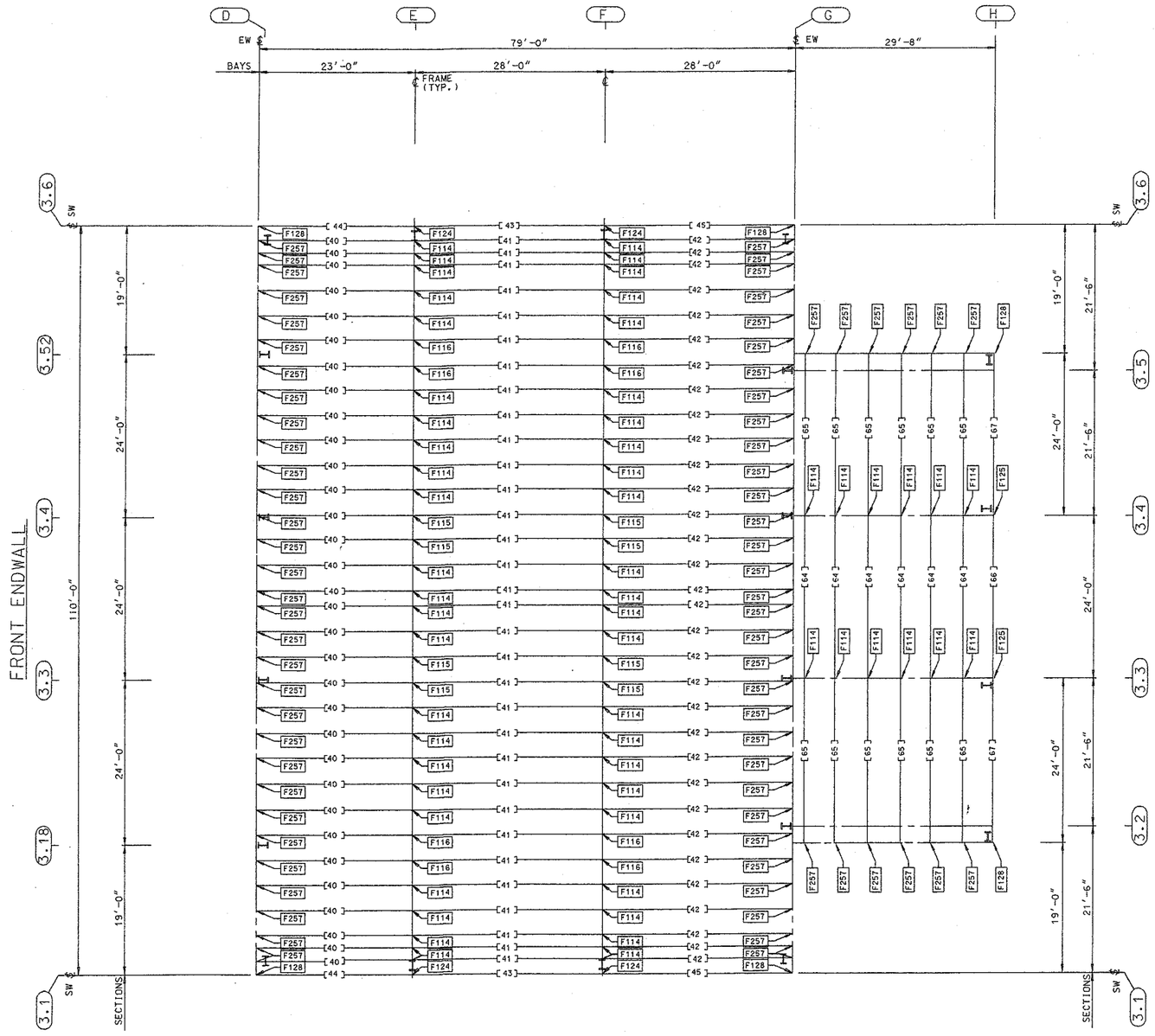

STAGE ROOF SECONDARY STRUCTURAL FRAMING PLAN

PART SCHEDULE				
[ ]	PART NAME	PART NUMBER	PART LENGTH	FIELD WORK △
40	PURLIN	530645 311-4	25'-11½"	
41	PURLIN	530643 371-4	30'-11½"	
42	PURLIN	530648 371-4	30'-11½"	
43	EAVE STRUT	540193 335-4	27'-11½"	
44	EAVE STRUT	540158-275-4	22'-11½"	
45	EAVE STRUT	540228 335-4	27'-11½"	
64	PURLIN	530641 323-4	26'-11½"	
65	PURLIN	530644 323-4	26'-11½"	
66	EAVE STRUT	540194-287-4	23'-11½"	
67	EAVE STRUT	540229 287-4	23'-11½"	

PURLIN BRACE LOCATION SCHEDULE					
BETWEEN GRIDS	LOCATION DETAIL	BRACE SECTION TOP	BRACE SECTION BOTTOM	DIM. "B"	RIDGE BRACE
D AND E	F151	(1) B			0544141
E AND F	F151	(1) B			0544141
F AND G	F151	(1) B			0544141
3.2 AND 3.3	F151	(1) B			
3.3 AND 3.4	F151	(1) B			
3.4 AND 3.5	F151	(1) B			

STANDARD NOTES:

RS0002 REFER TO DRAWING B-1080945 FOR PURLIN BRACE PART NUMBERS AND TYPICAL INSTALLATION FOR SLOPE LESS THAN OR EQUAL TO 0.75:12.

RS0008 REFER TO DETAIL F262 FOR RIDGE PURLIN BRACE CONNECTION.

FIELD WORK REQUIRED:

ADD HOLES TO PURLIN 530644 BOTTOM FLANGE FOR ATTACHMENT TO END WALL ROOF BEAM

RELEASED FOR CONSTRUCTION
10-31-95 (DATE)
(INIT)
DESTROY ALL PREVIOUS COPIES
PLATE FINAL

Approved for Construction

REVISION NO. 1	REVISION NO. 2		BUILDER:	PROJECT:	BUILDING ORDER DESCRIPTION:	DRAWING TITLE:		AG FILE NO:
DATE:	DATE:	BUTLER BUTLER HEAVY STRUCTURES GENERAL OFFICES-KANSAS CITY, MISSOURI	SOUTHERN CONSTRUCTION SYSTEMS INCORPORATED	SOUTH FLORIDA FAIRGROUNDS AMPHITHEATER W. PALM BEACH, FLA.	STAGE 30# LL + 3#CLL 110 MPH SBC 91	ROOF SECONDARY STRUCTURAL FRAMING PLAN	GROUP: 7	DATE: 05/31/95
DRAWN BY:	DRAWN BY:						DRAWING NUMBER: D 95-95502-25	REV. 00
CHECKED BY:	CHECKED BY:							

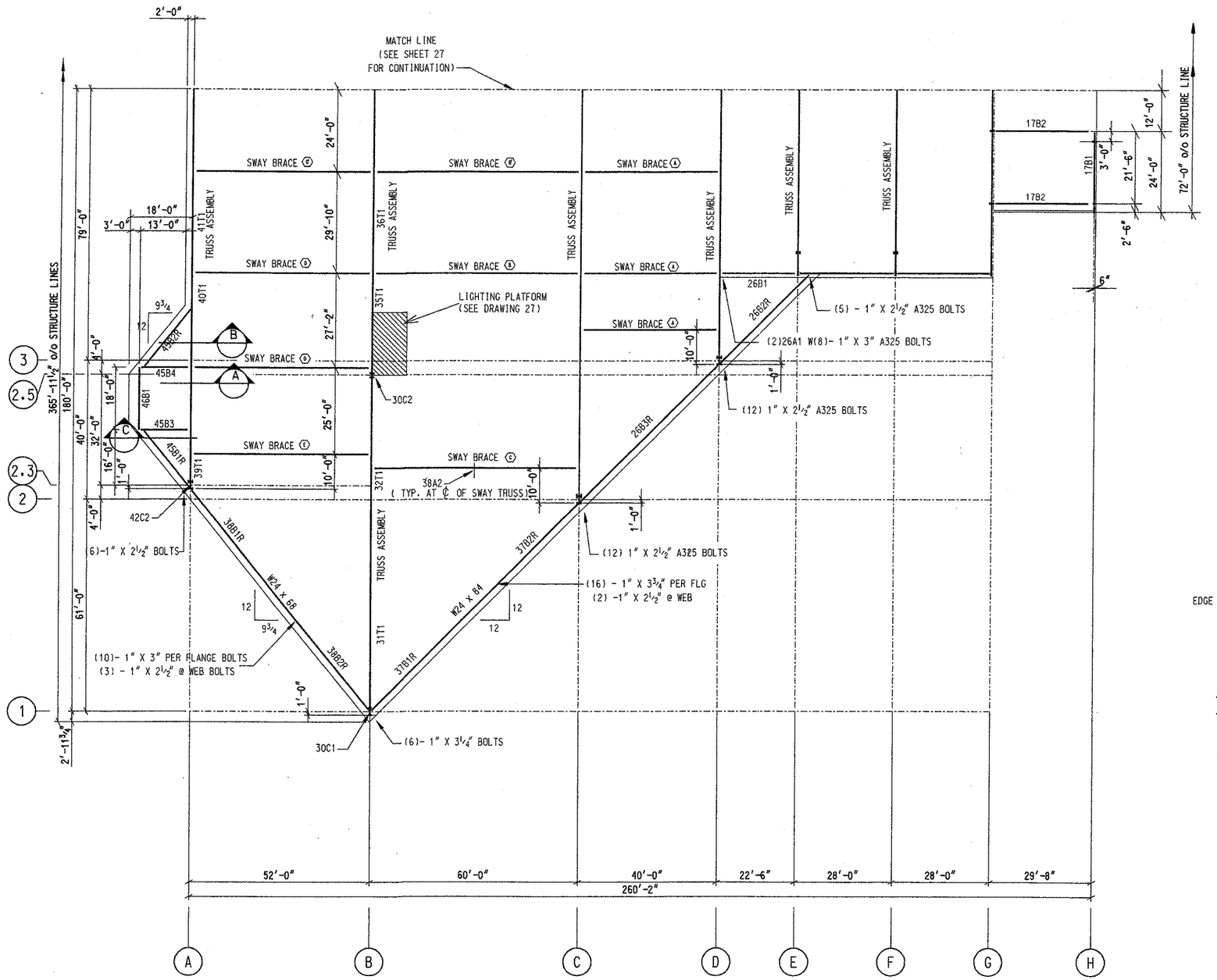

PARTIAL ROOF STRUCTURAL FRAMING PLAN

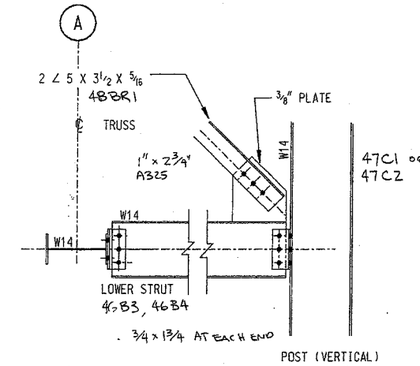

LOWER STRUT TO TRUSS & POST

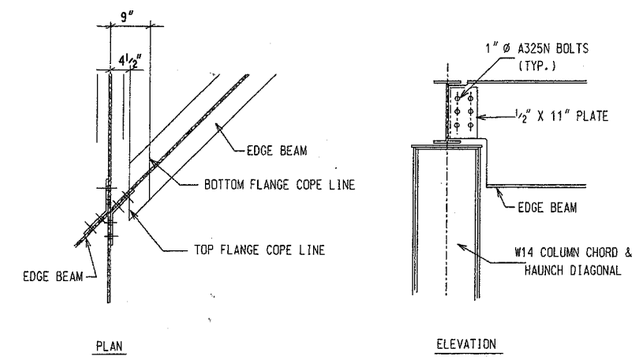

TYPICAL W14 TOP CHORD CONNECTION
@ EDGE OF BEAMS

FOR SWAY BRACE DETAILS SEE DRAWINGS 22 & 23.

FOR VIDEO TUBE FRAMING DETAILS SEE DGN. 26A.

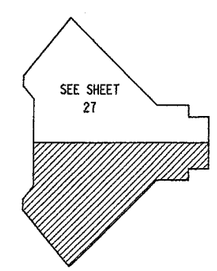

KEY PLAN

Approved for Construction

REVISION NO. 1	REVISION NO. 2			BUILDER:	PROJECT:	BUILDING ORDER DESCRIPTION:	DRAWING TITLE:		AG FILE NO:
DATE:	DATE:	BUTLER BUTLER HEAVY STRUCTURES GENERAL OFFICES-KANSAS CITY, MISSOURI		SOUTHERN CONSTRUCTION SYSTEMS INCORPORATED	SOUTH FLORIDA FAIRGROUNDS AMPHITHEATER W. PALM BEACH, FLA.	CANOPY 30# LL + 3#CLL 110 MPH SBC 91	PARTIAL ROOF STRUCTURAL PLAN DRAWING	GROUP: 7	DATE: 05/31/95
DRAWN BY:	DRAWN BY:							DRAWING NUMBER:	REV.
CHECKED BY:	CHECKED BY:							D 95-95502-26	

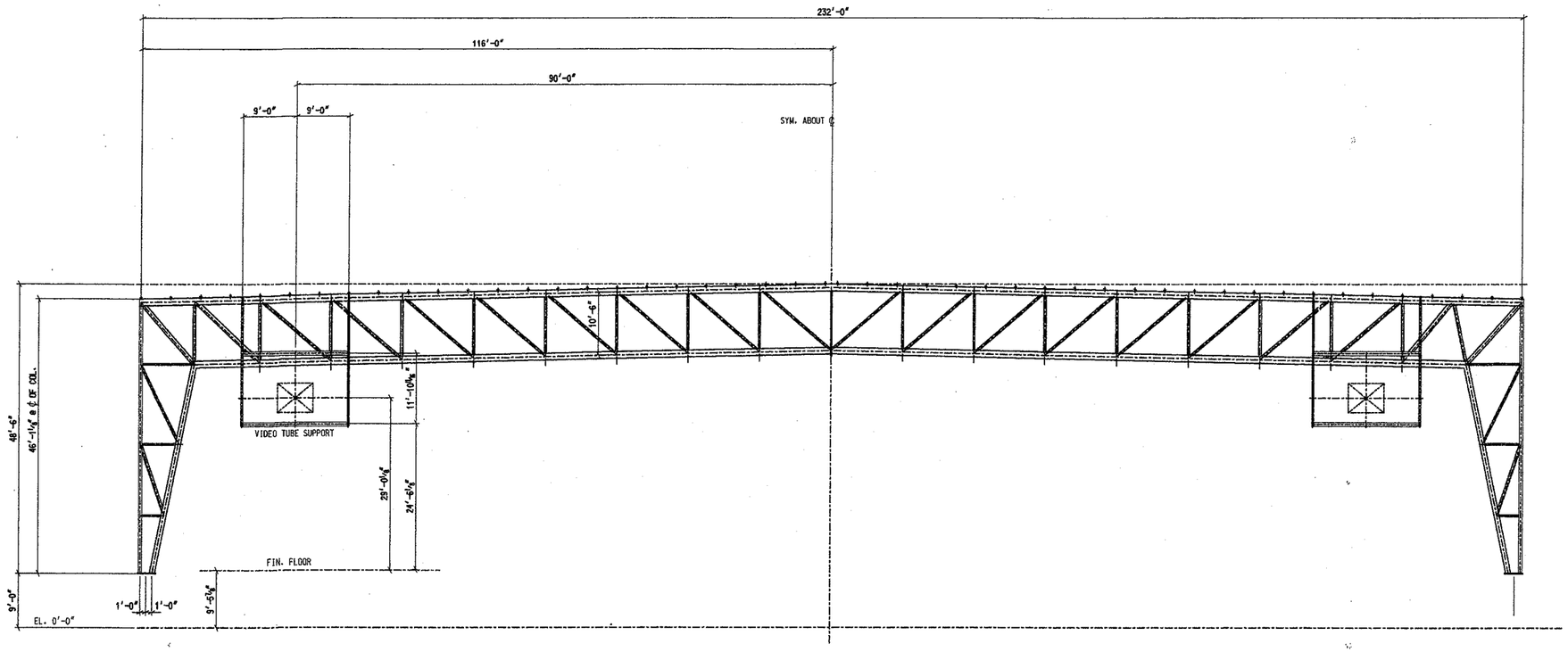

ELEVATION AT GRID LINE A

Approved for Construction

REVISION NO. 1.		REVISION NO. 2				BUILDER:	PROJECT:	BUILDING ORDER DESCRIPTION:	DRAWING TITLE:		AG FILE NO:
DATE:		DATE:		BUTLER		SOUTHERN CONSTRUCTION SYSTEMS INCORPORATED	SOUTH FLORIDA FAIRGROUNDS AMPHITHEATER W. PALM BEACH, FLA.	CANOPY 30# LL + 3#CLL 110 MPH SBC 91	ELEVATION AT LINE "A"	GROUP: 7	DATE: 05/31/95
DRAWN BY:		DRAWN BY:		BUTLER HEAVY STRUCTURES						DRAWING NUMBER:	REV.
CHECKED BY:		CHECKED BY:		GENERAL OFFICES-KANSAS CITY, MISSOURI						D 95-95502-09	00

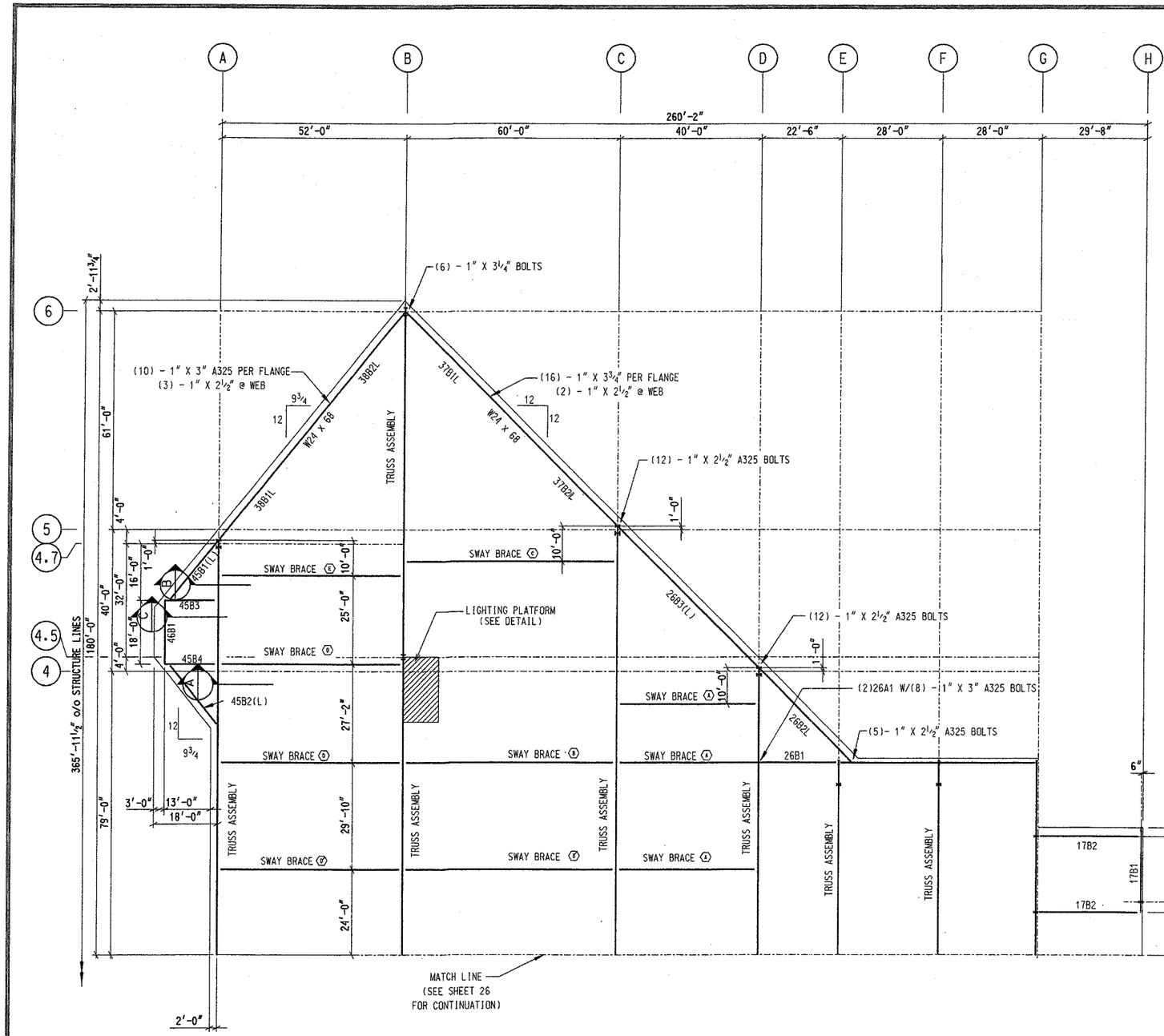

PARTIAL ROOF STRUCTURAL FRAMING PLAN

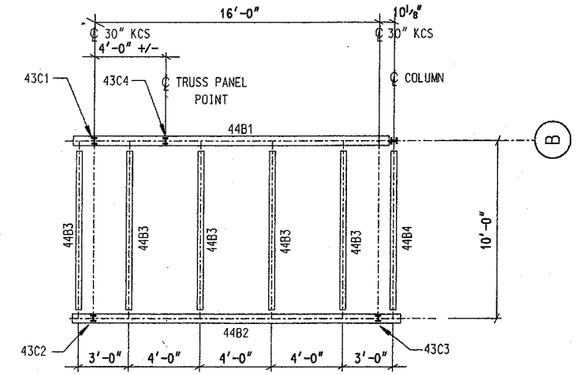

LIGHTING PLATFORM

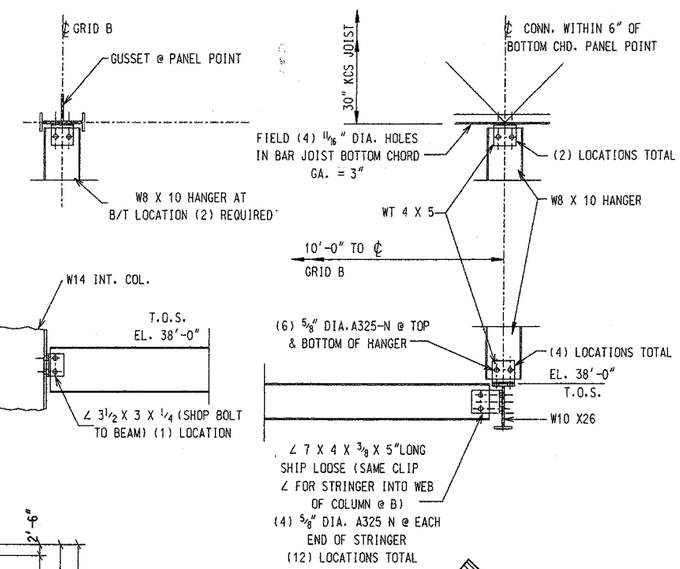

FOR SWAY BRACE DETAILS SEE DRAWINGS 22 & 23

FOR VIDEO TUBE FRAMING DETAILS SEE DGN. 26A

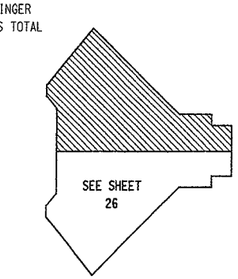

KEY PLAN

Approved for Construction

REVISION NO. 1	REVISION NO. 2		BUILDER:	PROJECT:	BUILDING ORDER DESCRIPTION:	DRAWING TITLE:		AG FILE NO:
DATE:	DATE:	BUTLER BUTLER HEAVY STRUCTURES GENERAL OFFICES-KANSAS CITY, MISSOURI	SOUTHERN CONSTRUCTION SYSTEMS INCORPORATED	SOUTH FLORIDA FAIRGROUNDS AMPHITHEATER W. PALM BEACH, FLA.	CANOPY 30# LL + 3#CLL 110 MPH SBC 91	PARTIAL ROOF STRUCTURAL PLAN DRAWING	GROUP: 7	DATE: 05/31/95
DRAWN BY:	DRAWN BY:						DRAWING NUMBER:	REV.
CHECKED BY:	CHECKED BY:						D 95-95502-27	00

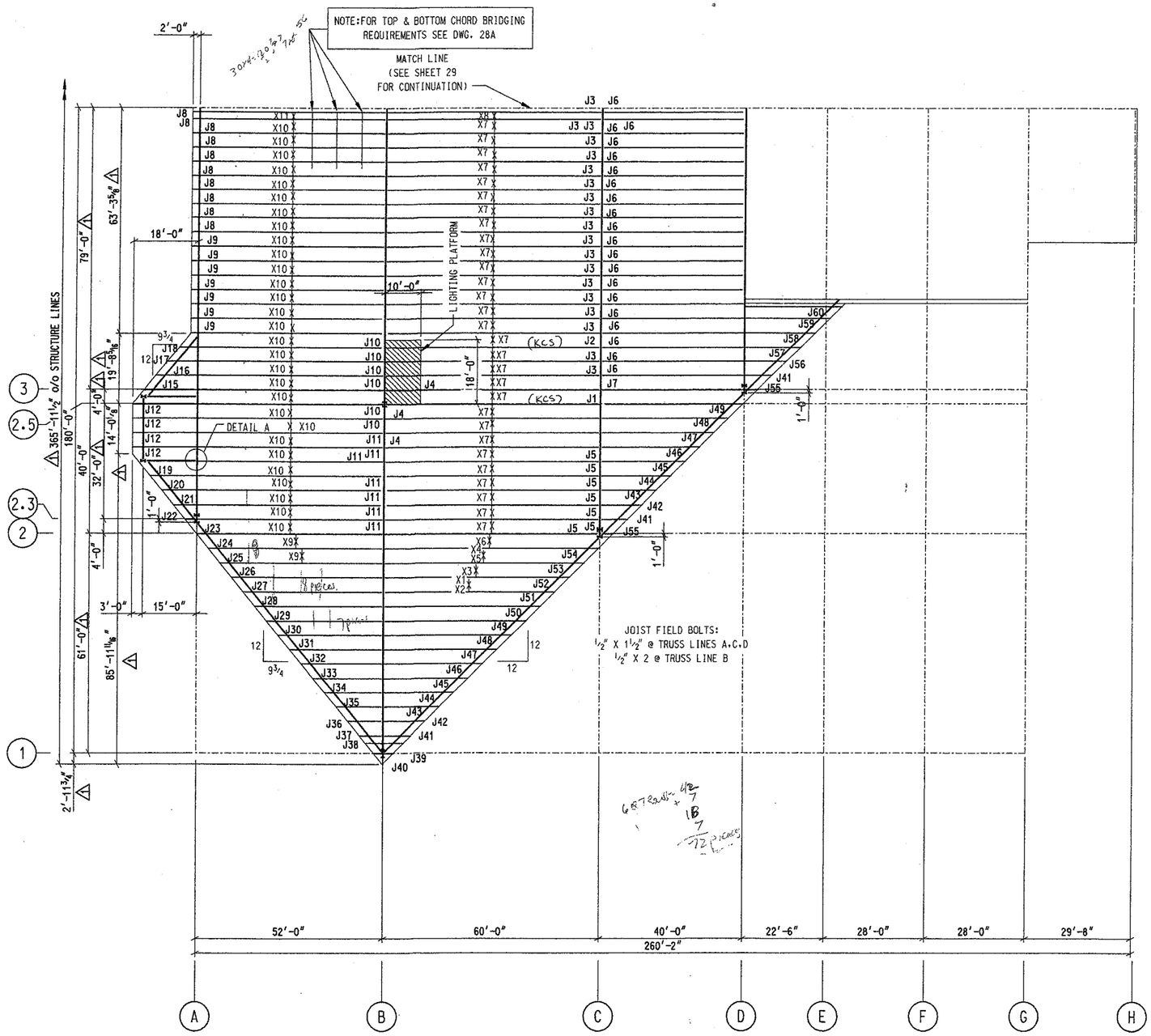

PARTIAL CANOPY ROOF JOIST FRAMING PLAN

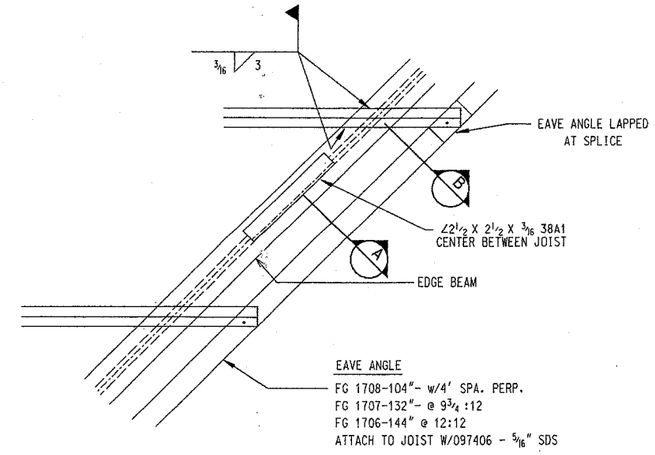

TYP. ANGLE ON PERIMETER BEAM

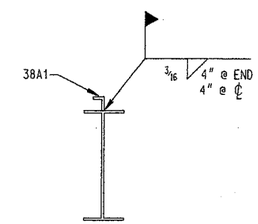

SECTION A

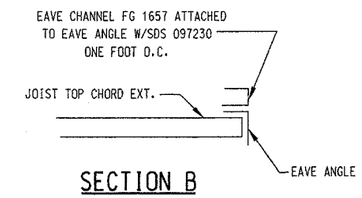

SECTION B

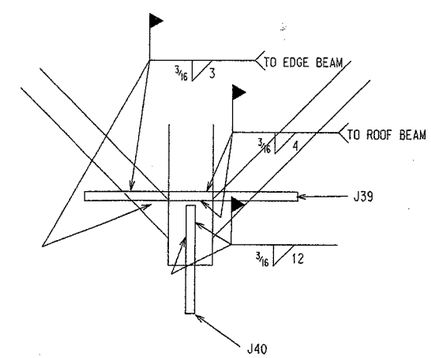

WELDING @ J39 & J40

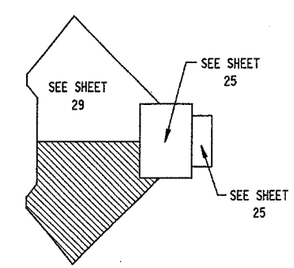

KEY PLAN

Approved for Construction

REVISION NO. 1		REVISION NO. 2								
DATE: 09/25/95	REVISED DIMENSIONS AS NOTED	DATE:		BUTLER HEAVY STRUCTURES	BUILDER: SOUTHERN CONSTRUCTION SYSTEMS INCORPORATED	PROJECT: SOUTH FLORIDA FAIRGROUNDS AMPHITHEATER W. PALM BEACH, FLA.	BUILDING ORDER DESCRIPTION: CANOPY 30# LL + 3#CLL 110 MPH SBC 91	DRAWING TITLE: PARTIAL CANOPY ROOF JOIST PLAN DRAWING	GROUP: 7	AG FILE NO:
DRAWN BY: BIRD		DRAWN BY:							DATE: 05/31/95	
CHECKED BY: STOR-CON		CHECKED BY:		GENERAL OFFICES-KANSAS CITY, MISSOURI					DRAWING NUMBER: D 95-95502-28	REV. 01

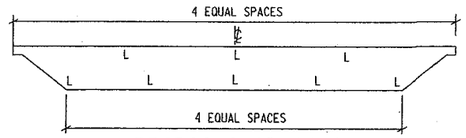

BRIDGING SPACING

MK:J6,J7,J26,J27,J28,J48,J49,J50

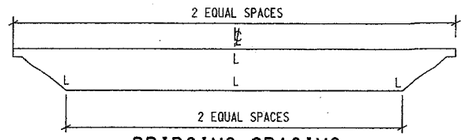

BRIDGING SPACING

MK:J12,J13,J14,J34,J43,J57

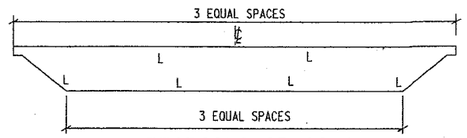

BRIDGING SPACING

MK:J31,J32,J33,J44,J45,J46,J58,J59J60

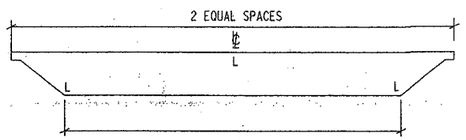

BRIDGING SPACING

MK:J15,J19,J35,J42,J56

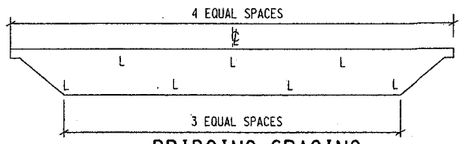

BRIDGING SPACING

MK:J29,J30,J47

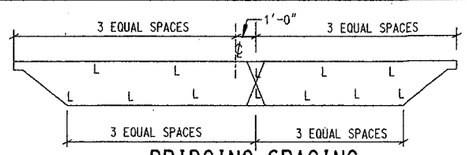

BRIDGING SPACING

MK:J1,J2,J3,J4,J5,J54

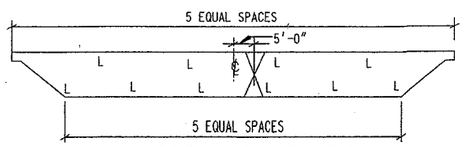

BRIDGING SPACING

MK:J8,J9,J10,J11,J23,J24,J25,J51,J52,J53

Approved for Construction

FOR CONSTRUCTION

REVISION NO. 1	REVISION NO. 2		BUILDER:	PROJECT:	BUILDING ORDER DESCRIPTION:	DRAWING TITLE:		AG FILE NO:
DATE:	DATE:	BUTLER BUTLER HEAVY STRUCTURES GENERAL OFFICES-KANSAS CITY, MISSOURI	SOUTHERN CONSTRUCTION SYSTEMS INCORPORATED	SOUTH FLORIDA FAIRGROUNDS AMPHITHEATER W. PALM BEACH, FLA.	CANOPY 30# LL + 3#CLL 110 MPH SBC 91	PARTIAL CANOPY ROOF JOIST PLAN DRAWING	GROUP: 7	DATE: 11/15/95
DRAWN BY:	DRAWN BY:						DRAWING NUMBER:	REV.
CHECKED BY: SICR-CON	CHECKED BY:						D 95-95502-28A	00

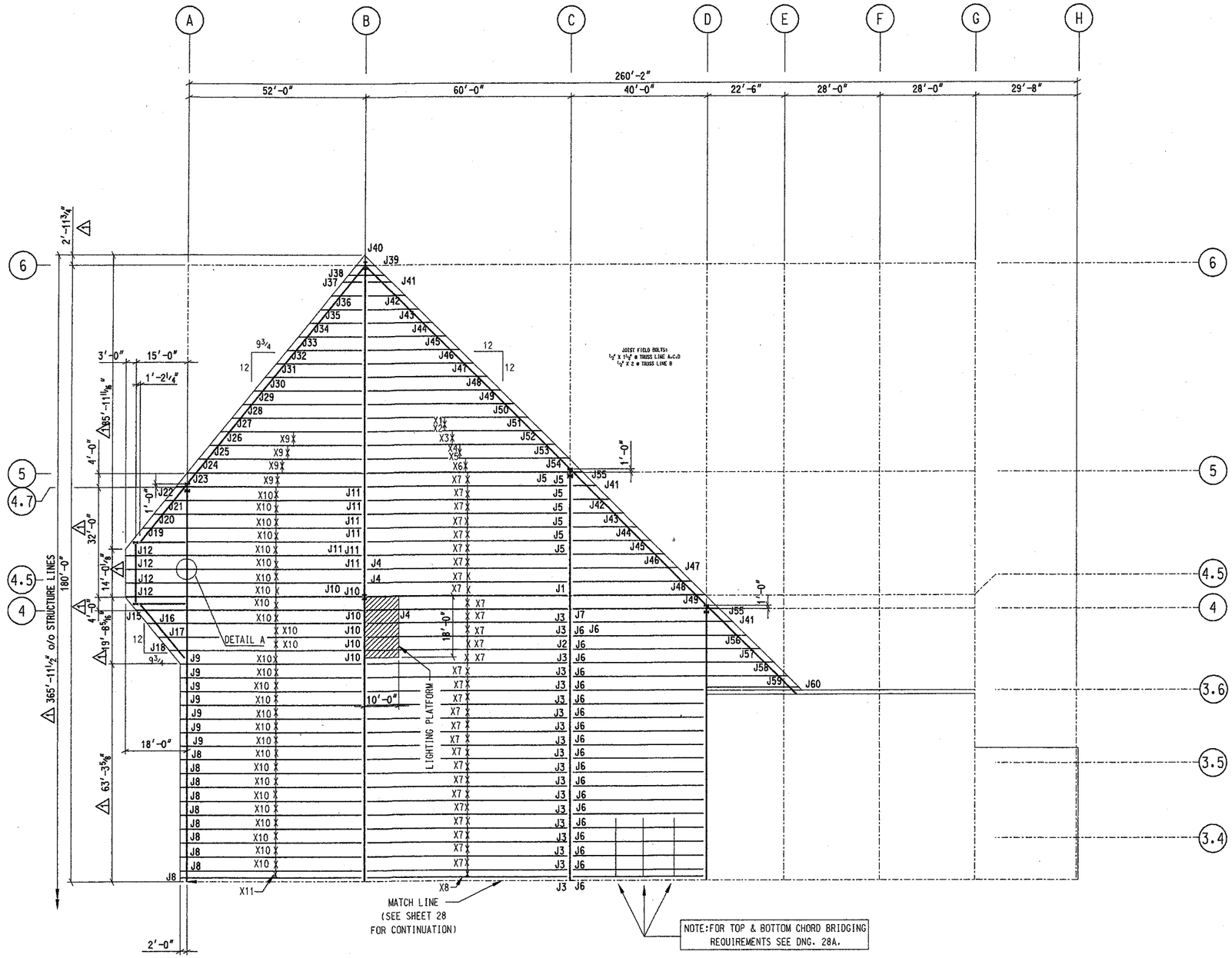

PARTIAL CANOPY ROOF JOIST FRAMING PLAN

Approved for Construction

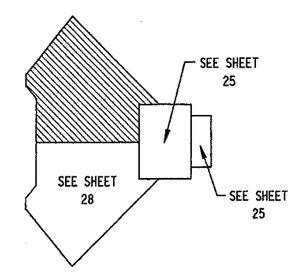

KEY PLAN

REVISION NO. 1		REVISION NO. 2			BUILDER:	PROJECT:	BUILDING ORDER DESCRIPTION:	DRAWING TITLE:		AG FILE NO:
DATE: 09/25/95	REVISED DIMENSIONS AS NOTED	DATE:		BUTLER HEAVY STRUCTURES GENERAL OFFICES-KANSAS CITY, MISSOURI	SOUTHERN CONSTRUCTION SYSTEMS INCORPORATED	SOUTH FLORIDA FAIRGROUNDS AMPHITHEATER W. PALM BEACH, FLA.	CANOPY 30# LL + 3#CLL 110 MPH SBC 91	PARTIAL CANOPY ROOF JOIST PLAN DRAWING	GROUP: 7	DATE: 05/31/95
DRAWN BY: BIRD		DRAWN BY:							DRAWING NUMBER: D 95-95502-29	REV. 01
CHECKED BY: STOR-CON		CHECKED BY:								

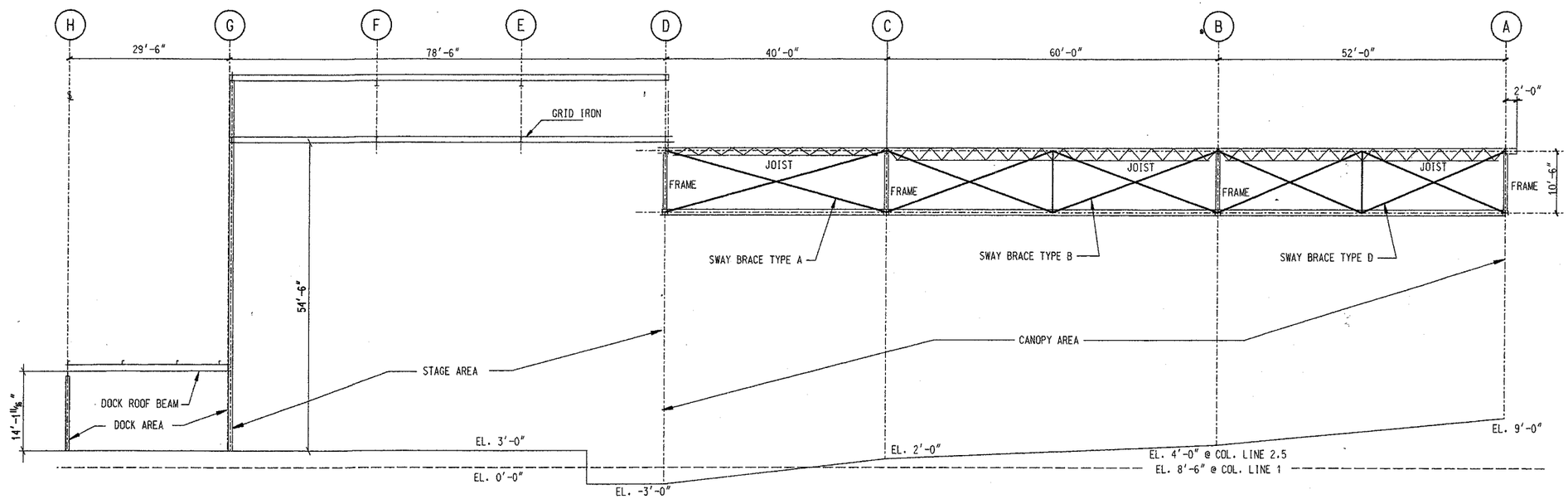

CROSS SECTION

Approved for Construction

REVISION NO. 1	REVISION NO. 2		BUILDER:	PROJECT:	BUILDING ORDER DESCRIPTION:	DRAWING TITLE:		AG FILE NO:
DATE:	DATE:	BUTLER BUTLER HEAVY STRUCTURES GENERAL OFFICES-KANSAS CITY, MISSOURI	SOUTHERN CONSTRUCTION SYSTEMS INCORPORATED	SOUTH FLORIDA FAIRGROUNDS AMPHITHEATER W. PALM BEACH, FLA.	CANOPY 30# LL + 3#CLL 110 MPH SBC 91	CROSS SECTION	GROUP: 7	DATE: 05/31/95
DRAWN BY:	DRAWN BY:						DRAWING NUMBER:	REV.
CHECKED BY:	CHECKED BY:						D 95-95502-30	00

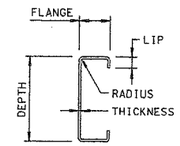

C - SECTION DESIGN INFORMATION					
PART	DEPTH	FLANGE	LIP	THICKNESS	RADIUS
EAVE STRUT 540193 335-4	9 1/2"	3 1/2"	7/8"	.066"	5/16"
EAVE STRUT 540228 275-4	9 1/2"	3 1/2"	7/8"	.066"	5/16"
EAVE STRUT 540228 335-4	9 1/2"	3 1/2"	7/8"	.066"	5/16"
EAVE STRUT 540194 287-4	9 1/2"	3 1/2"	1 1/8"	.089"	5/16"
EAVE STRUT 540229 287-4	9 1/2"	3 1/2"	1 1/8"	.089"	5/16"

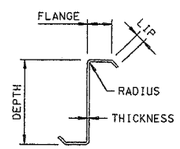

Z - SECTION DESIGN INFORMATION					
PART	DEPTH	FLANGE	LIP	THICKNESS	RADIUS
PURLIN 530645 311-4	9 1/2"	2 3/4"	1 1/16"	.084"	1/4"
PURLIN 530648 371-4	9 1/2"	2 3/4"	1 1/16"	.120"	1/4"
PURLIN 530643 371-4	9 1/2"	2 3/4"	1 1/16"	.073"	1/4"
PURLIN 530641 323-4	9 1/2"	2 3/4"	1 1/16"	.060	1/4"
PURLIN 530644 323-4	9 1/2"	2 3/4"	1 1/16"	.080"	1/4"

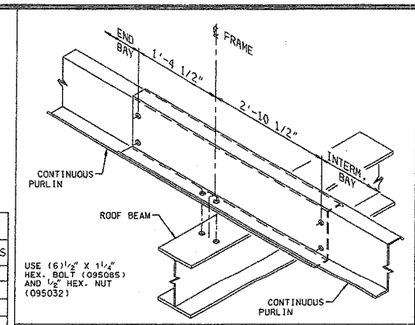

DETAIL F114 — CONTINUOUS SPAN PURLIN CONNECTION
END BAY LOCATION - 9 1/2" PURLIN

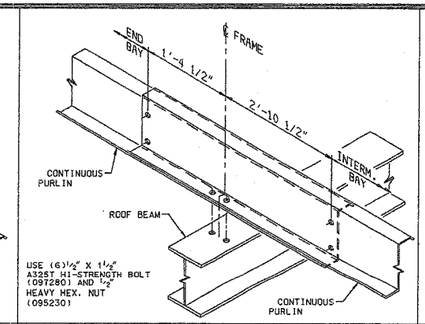

DETAIL F115 — CONTINUOUS SPAN PURLIN CONNECTION
END BAY LOC. STRUT CONN. - 9 1/2" PURLIN

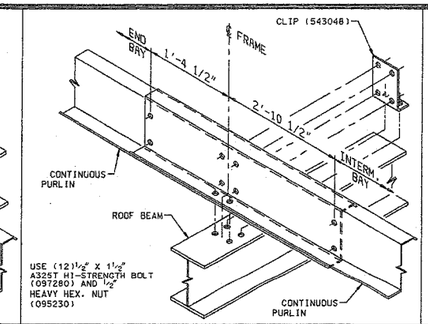

DETAIL F116 — CONTINUOUS SPAN PURLIN CONNECTION
END BAY LOC. STRUT CONN.-W/ CLIP-9 1/2" PURL.

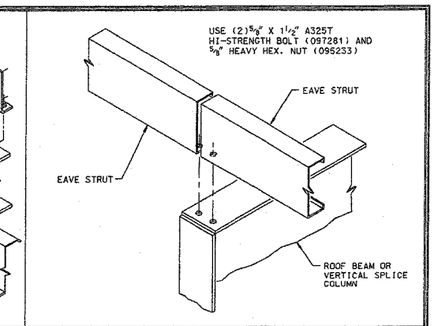

DETAIL F124 — EAVE STRUT CONN. TO INTERM. FRAME

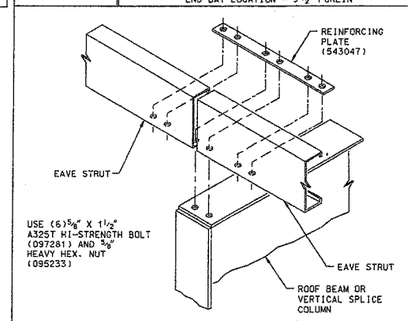

DETAIL F125 — EAVE STRUT CONN. TO INTERM. FRAME
STRUT CONNECTION

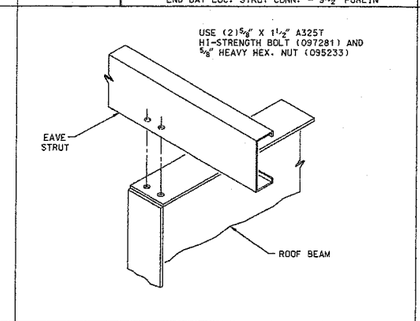

DETAIL F128 — EAVE STRUT CONN. TO ENDWALL FRAME

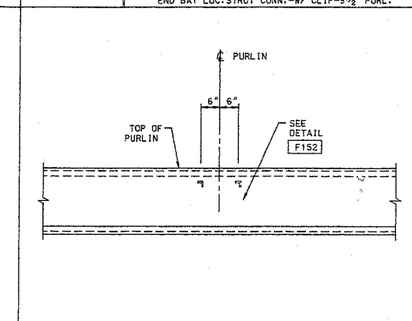

DETAIL F151 — PURLIN BRACE LAYOUT
(1) ROW TOP - (0) ROWS BOTTOM

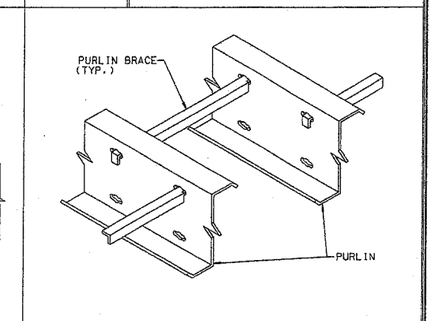

DETAIL F152 — PURLIN BRACE
TOP ROW

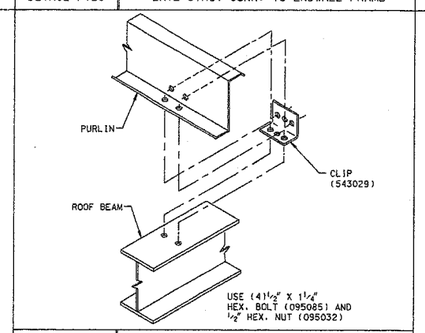

DETAIL F257 — PURLIN CONNECTION TO EW ROOF BEAM

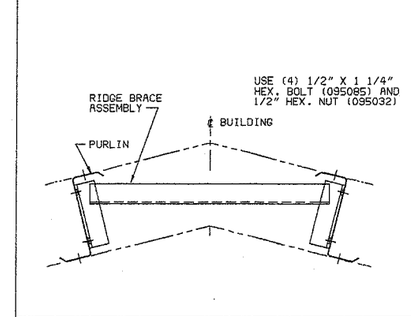

DETAIL F262 — RIDGE CHANNEL CONNECTION

RELEASED FOR CONSTRUCTION
10-31-95 (DATE)
(INIT)
DESTROY ALL PREVIOUS COPIES
PHASE I FINAL

Approved for Construction

REVISION NO. 1	REVISION NO. 2		BUILDER:	PROJECT:	BUILDING ORDER DESCRIPTION:	DRAWING TITLE:		AG FILE NO:
DATE:	DATE:	BUTLER HEAVY STRUCTURES	SOUTHERN CONSTRUCTION SYSTEMS INCORPORATED	SOUTH FLORIDA FAIRGROUNDS AMPHITHEATER W. PALM BEACH, FLA.	STAGE 30# LL + 3#CLL 110 MPH SBC 91	ROOF SECONDARY STRUCTURAL DETAILS	GROUP: 7	DATE: 05/31/95
DRAWN BY:	DRAWN BY:	GENERAL OFFICES-KANSAS CITY, MISSOURI					DRAWING NUMBER: D 95-95502-31	REV. 00
CHECKED BY:	CHECKED BY:							

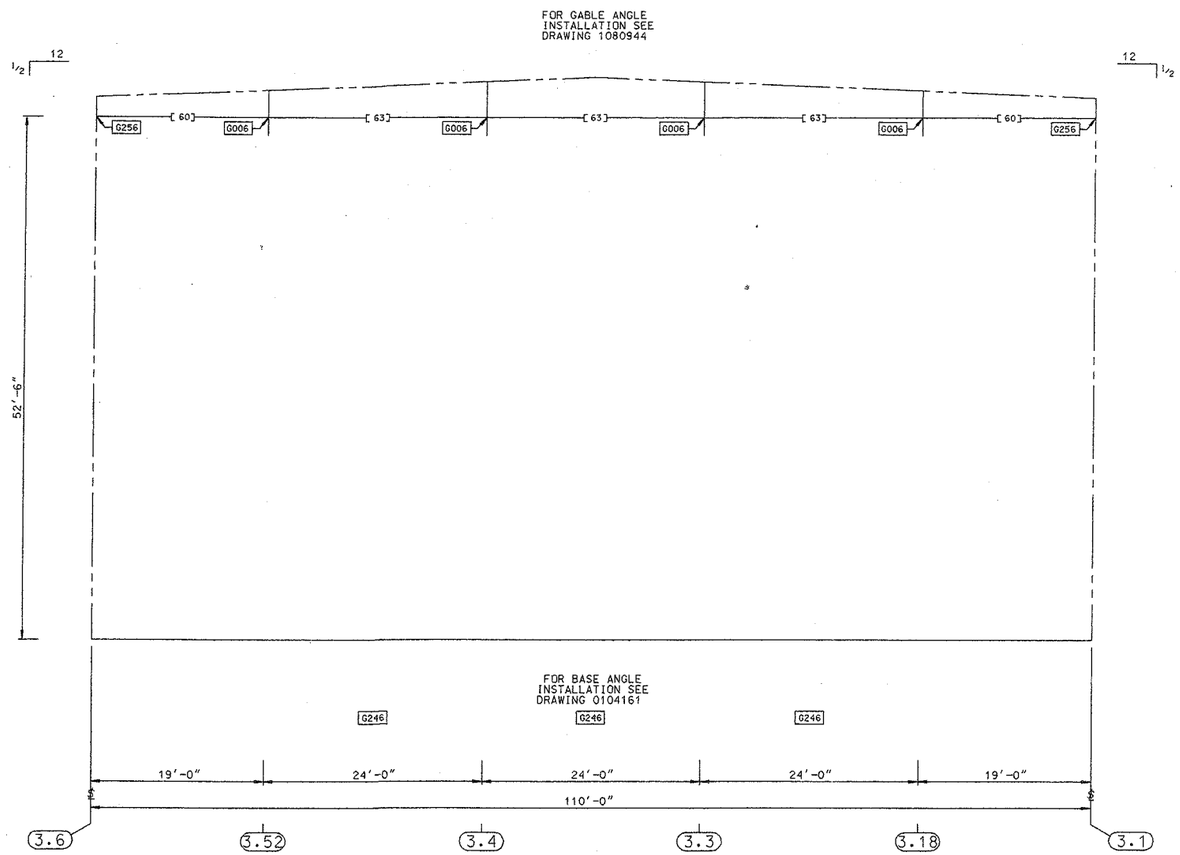

STAGE FRONT EW STRUCTURAL ELEVATION AT GRID D

PART SCHEDULE				
[ ]	PART NAME	PART NUMBER	PART LENGTH	FIELD WORK △
60	GIRT	550300 199-2	16'-7 1/4"	
63	GIRT	550301 277-2	23'-1 1/4"	

STANDARD NOTES:

WS0006 FILL ALL OPEN HOLES IN DOOR POST WEBS WITH PLASTIC SNAP-IN PLUGS (097229).

WS0010 THIS UNIT HAS AN OVERHEAD DOOR REQUIRING A DOUBLE "C" HEADER. BOLT THE TWO "C" HEADERS TOGETHER WITH (2) 1/2" X 1 1/4" BOLTS (095085) AND NUTS (095032) ON APPROXIMATELY 5'-0" CENTERS. IF FACTORY HOLES ARE NOT PROVIDED IN HEADERS, FIELD LOCATE 3/16" DIA. HOLES AS REQUIRED.

WS0011 GIRTS MUST BE INSTALLED ABOVE DOUBLE C HEADER AT STANDARD LOCATION.

WS0014 Unpunched girts are supplied at overhead or slide doors. Punched wall systems require the field drilling of the 3/16" panel attachment holes in the girt flange.

WS0023 I M P O R T A N T
REFER TO PRONTO DETAIL G047 FOR PROPER GIRT ALIGNMENT.

RELEASED FOR CONSTRUCTION
10-31-95 (DATE) (INIT)
DESTROY ALL PREVIOUS COPIES
PHASE I FINAL

Approved for Construction

REVISION NO. 1	REVISION NO. 2			BUILDER:	PROJECT:	BUILDING ORDER DESCRIPTION:	DRAWING TITLE:		AG FILE NO:
DATE:	DATE:	BUTLER HEAVY STRUCTURES		SOUTHERN CONSTRUCTION SYSTEMS INCORPORATED	SOUTH FLORIDA FAIRGROUNDS AMPHITHEATER W. PALM BEACH, FLA.	STAGE 30# LL + 3#CLL 110 MPH SBC 91	WALL SECONDARY STRUCTURAL ELEVATION	GROUP: 7	DATE: 05/31/95
DRAWN BY:	DRAWN BY:	GENERAL OFFICES-KANSAS CITY, MISSOURI						DRAWING NUMBER: D 95-95502-32	REV. 00
CHECKED BY:	CHECKED BY:								

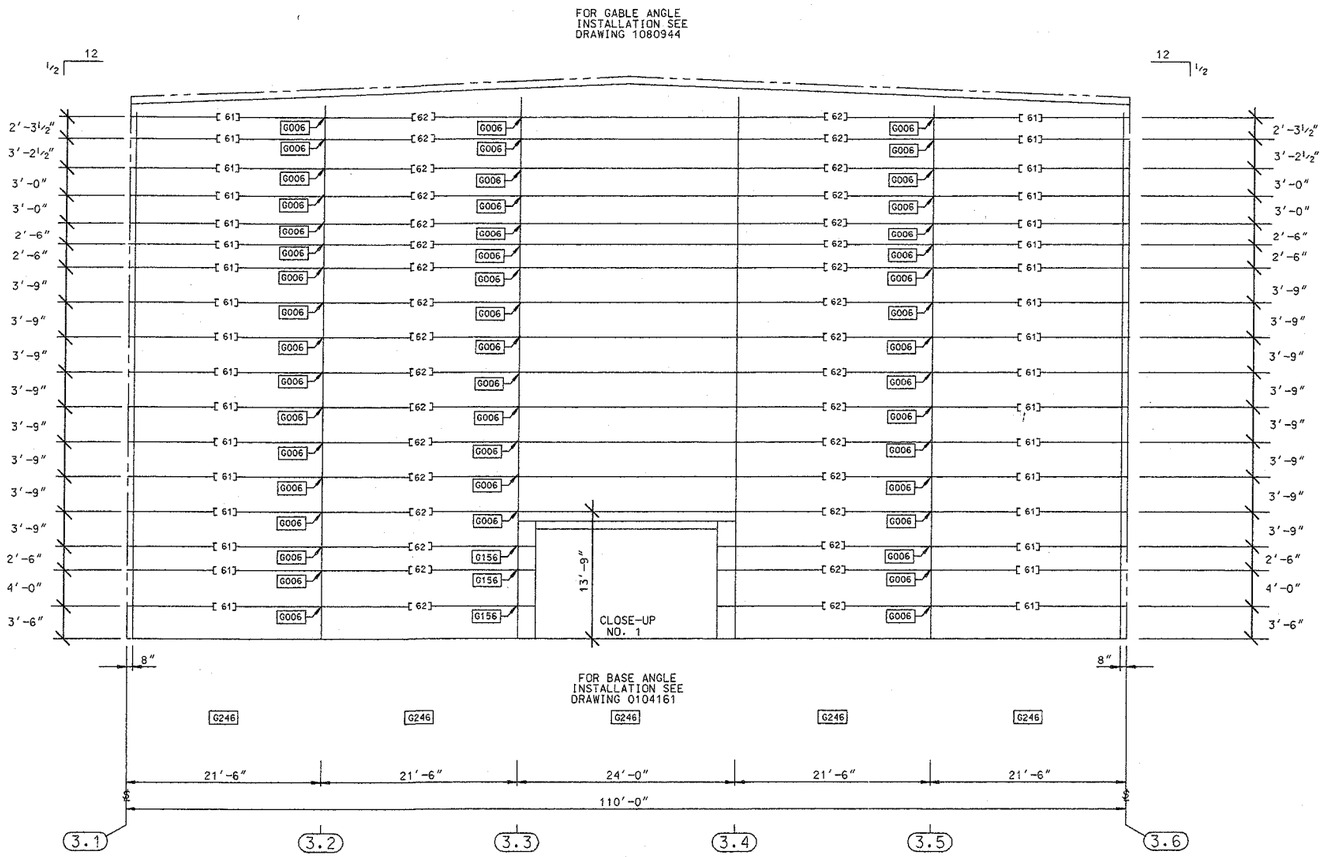

STAGE REAR EW STRUCTURAL ELEVATION AT GRID G

PART SCHEDULE				
[ ]	PART NAME	PART NUMBER	PART LENGTH	FIELD WORK △
61	GIRT	550300 229-2	19'-1 1/4"	
62	GIRT	550300 247-2	20'-7 1/4"	
63	GIRT	550301 277-2	23'-1 1/4"	
56	DOOR HEADER	580145	23'-11 1/2"	1
57	DOOR POST	580250	12'-6 1/16"	
58	(2) DOOR HEADER	580629	23'-11 1/2"	2

FIELD WORK SCHEDULE				
△	DETAIL	FIELD WORK DIMENSIONS		
1	X026	A = 19'-11 1/2"	B = 4'-0"	
2	X027	A = 5 3/8"	B = 23'-0 3/4"	C = 5 3/8"
		D = 3"	E = 7/8"	F = 7/8"

STANDARD NOTES:

WS0006 FILL ALL OPEN HOLES IN DOOR POST WEBS WITH PLASTIC SNAP-IN PLUGS (097229).

WS0010 THIS UNIT HAS AN OVERHEAD DOOR REQUIRING A DOUBLE "C" HEADER. BOLT THE TWO "C" HEADERS TOGETHER WITH (2) 1/2" X 1 1/4" BOLTS (095085) AND NUTS (095032) ON APPROXIMATELY 5'-0" CENTERS. IF FACTORY HOLES ARE NOT PROVIDED IN HEADERS, FIELD LOCATE 9/16" DIA. HOLES AS REQUIRED.

WS0011 GIRTS MUST BE INSTALLED ABOVE DOUBLE C HEADER AT STANDARD LOCATION.

WS0014 Unpunched girts are supplied at overhead or slide doors. Punched wall systems require the field drilling of the 9/16" panel attachment holes in the girt flange.

WS0023 I M P O R T A N T
REFER TO PRONTO DETAIL G047 FOR PROPER GIRT ALIGNMENT.

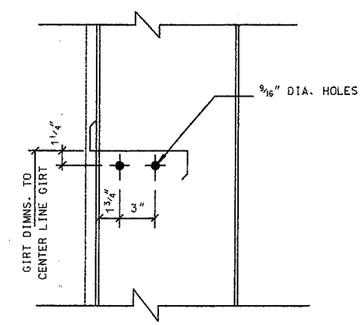

TYPICAL GIRT CONNECTION

RELEASED FOR CONSTRUCTION
10-31-95 (DATE) (INIT)
DESTROY ALL PREVIOUS COPIES
PHASE I FINAL

Approved for Construction

REVISION NO. 1	REVISION NO. 2		BUILDER:	PROJECT:	BUILDING ORDER DESCRIPTION:	DRAWING TITLE:		AG FILE NO:
DATE:	DATE:	BUTLER BUTLER HEAVY STRUCTURES GENERAL OFFICES-KANSAS CITY, MISSOURI	SOUTHERN CONSTRUCTION SYSTEMS INCORPORATED	SOUTH FLORIDA FAIRGROUNDS AMPHITHEATER W. PALM BEACH, FLA.	STAGE 30# LL + 3#CLL 110 MPH SBC 91	WALL SECONDARY STRUCTURAL ELEVATION	GROUP: 7	DATE: 05/31/95
DRAWN BY:	DRAWN BY:						DRAWING NUMBER:	REV.
CHECKED BY:	CHECKED BY:						D 95-95502-33	00

PART SCHEDULE				
[ ]	PART NAME	PART NUMBER	PART LENGTH	FIELD WORK △
38	PURLIN / GIRT	530634 299-4	24'-11½"	
39	PURLIN / GIRT	530634 359-4	29'-11½"	
68	PURLIN / GIRT	530634 455-4	37'-11½"	

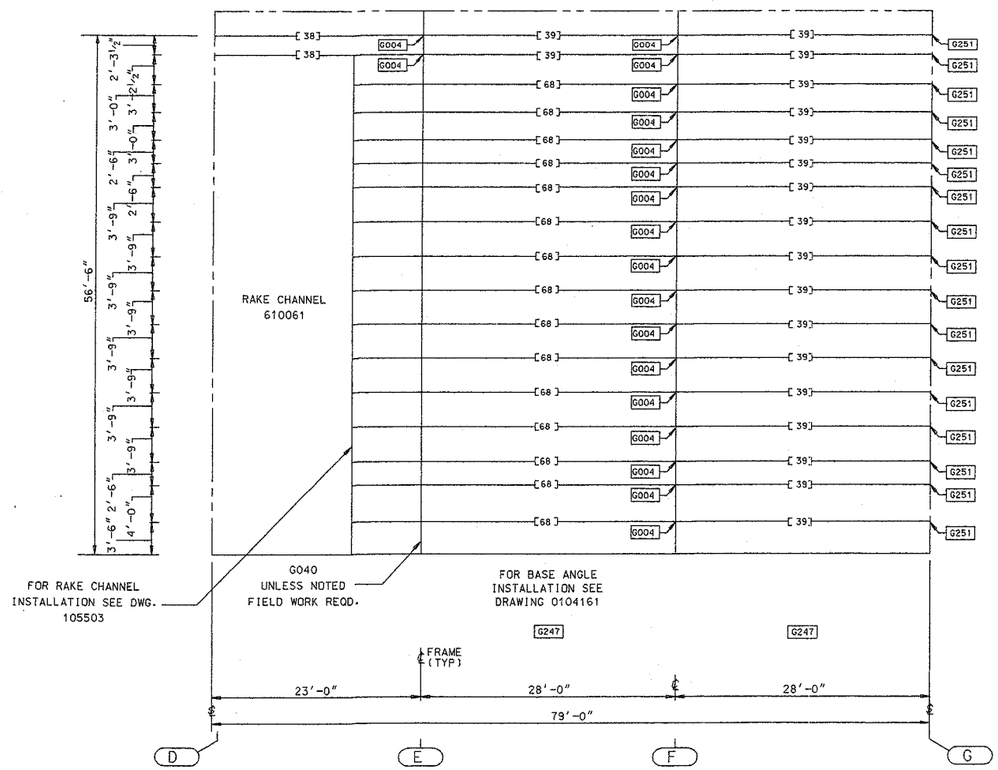

STAGE RIGHT SW STRUCTURAL ELEVATION AT GRID 3.1

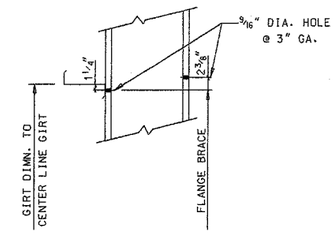

TYPICAL GIRT CONNECTION

Approved for Construction

RELEASED FOR CONSTRUCTION
10-3-95 (DATE) BJC (INIT)
DESTROY ALL PREVIOUS COPIES
PHASE FINAL

REVISION NO. 1		REVISION NO. 2		BUTLER HEAVY STRUCTURES	BUILDER:	PROJECT:	BUILDING ORDER DESCRIPTION:	DRAWING TITLE:		AG FILE NO:
DATE:		DATE:		GENERAL OFFICES-KANSAS CITY, MISSOURI	SOUTHERN CONSTRUCTION SYSTEMS INCORPORATED	SOUTH FLORIDA FAIRGROUNDS AMPHITHEATER W. PALM BEACH, FLA.	STAGE 30# LL + 3#CLL 110 MPH SBC 91	WALL SECONDARY STRUCTURAL ELEVATION	GROUP: 7	DATE: 05/31/95
DRAWN BY:		DRAWN BY:							DRAWING NUMBER: D 95-95502-34	REV. 00
CHECKED BY:		CHECKED BY:								

PART SCHEDULE				
[ ]	PART NAME	PART NUMBER	PART LENGTH	FIELD WORK △
38	PURLIN / GIRT	530634 299-4	24'-11½"	
39	PURLIN / GIRT	530634 359-4	29'-11½"	
68	PURLIN / GIRT	530634 455-4	37'-11½"	

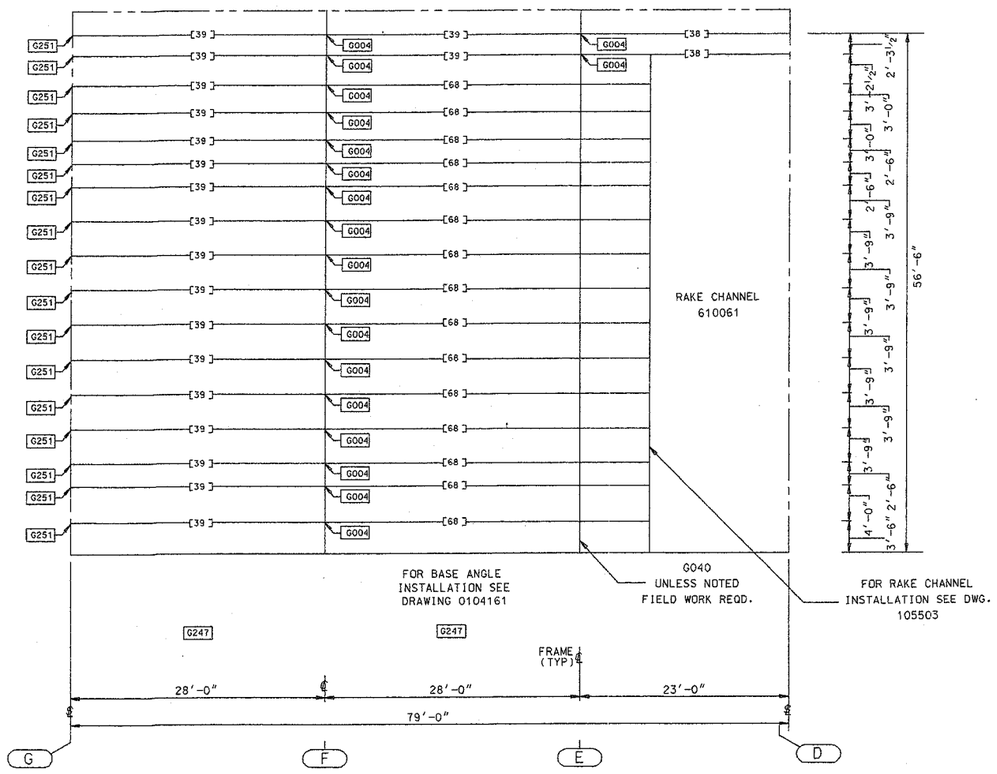

STAGE LEFT SW STRUCTURAL ELEVATION AT GRID 3.6

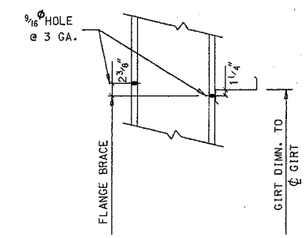

TYPICAL GIRT CONNECTION

Approved for Construction

RELEASED FOR CONSTRUCTION
10-31-95 (DATE)
BJ (INIT)
DESTROY ALL PREVIOUS COPIES
PHASE I FINAL

REVISION NO. 1	REVISION NO. 2		BUILDER:	PROJECT:	BUILDING ORDER DESCRIPTION:	DRAWING TITLE:		AG FILE NO:
DATE:	DATE:	BUTLER BUTLER HEAVY STRUCTURES GENERAL OFFICES-KANSAS CITY, MISSOURI	SOUTHERN CONSTRUCTION SYSTEMS INCORPORATED	SOUTH FLORIDA FAIRGROUNDS AMPHITHEATER W. PALM BEACH, FLA.	STAGE 30# LL + 3#CLL 110 MPH SBC 91	WALL SECONDARY STRUCTURAL ELEVATION	GROUP: 7	DATE: 05/31/95
DRAWN BY:	DRAWN BY:						DRAWING NUMBER: D 95-95502-35	REV. 00
CHECKED BY:	CHECKED BY:							

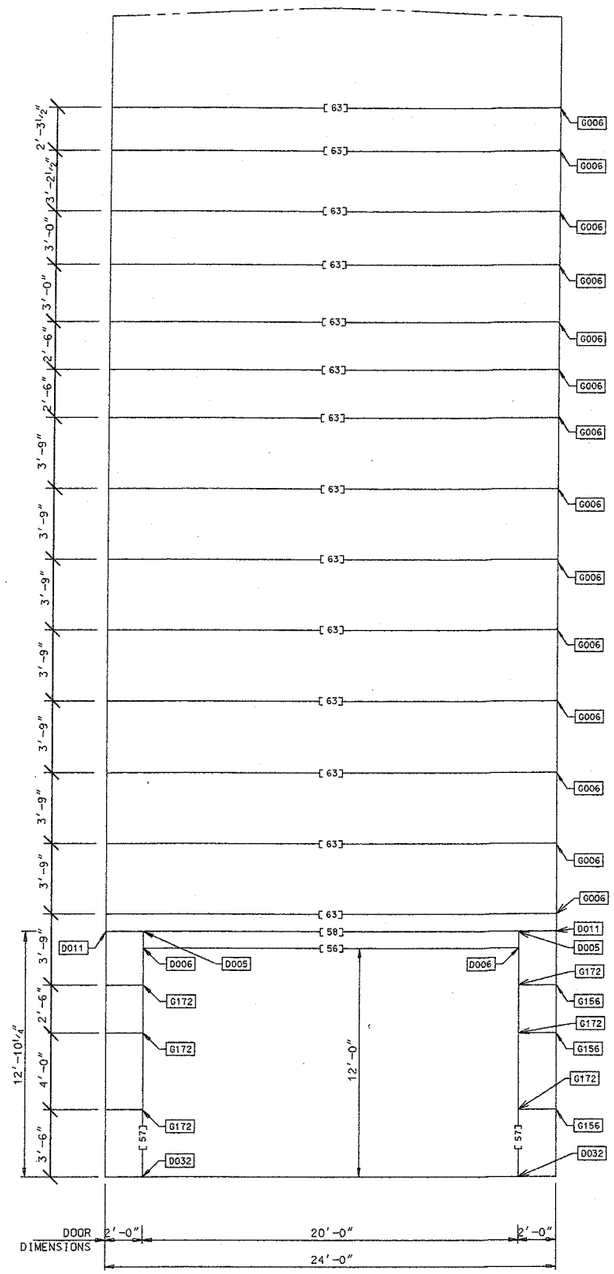

CLOSE-UP #1

PART SCHEDULE				
[ ]	PART NAME	PART NUMBER	PART LENGTH	FIELD WORK △
56	DOOR HEADER	580145	23'-11½"	1
57	DOOR POST	580250	12'-6 7/16"	
58	(2) DOOR HEADER	580629	23'-11½"	2
63	GIRT	550301 277-2	23'-11¼"	

FIELD WORK SCHEDULE				
△	DETAIL	FIELD WORK DIMENSIONS		
1	X026	A = 19'-11½"	B = 4'-0"	
2	X027	A = 5⅜"	B = 23'-0¾"	C = 5⅜"
		D = 3"	E = ⅞"	F = ⅞"

STANDARD NOTES:

WS0006 FILL ALL OPEN HOLES IN DOOR POST WEBS WITH PLASTIC SNAP-IN PLUGS (097229).

WS0010 THIS UNIT HAS AN OVERHEAD DOOR REQUIRING A DOUBLE "C" HEADER. BOLT THE TWO "C" HEADERS TOGETHER WITH (2)½" X 1¼" BOLTS (095085) AND NUTS (095032) ON APPROXIMATELY 5'-0" CENTERS. IF FACTORY HOLES ARE NOT PROVIDED IN HEADERS, FIELD LOCATE 5/16" DIA. HOLES AS REQUIRED.

WS0011 GIRTS MUST BE INSTALLED ABOVE DOUBLE C HEADER AT STANDARD LOCATION.

WS0014 Unpunched girts are supplied at overhead or slide doors. Punched wall systems require the field drilling of the 5/16" panel attachment holes in the girt flange.

WS0023 I M P O R T A N T
****
REFER TO PRONTO DETAIL G047 FOR PROPER GIRT ALIGNMENT.

RELEASED FOR CONSTRUCTION
10-31-95 (DATE) BAP (INIT)
DESTROY ALL PREVIOUS COPIES
PHASE 4 FINAL

Approved for Construction

REVISION NO. 1	REVISION NO. 2		BUILDER:	PROJECT:	BUILDING ORDER DESCRIPTION:	DRAWING TITLE:		AG FILE NO:
DATE:	DATE:	BUTLER BUTLER HEAVY STRUCTURES GENERAL OFFICES-KANSAS CITY, MISSOURI	SOUTHERN CONSTRUCTION SYSTEMS INCORPORATED	SOUTH FLORIDA FAIRGROUNDS AMPHITHEATER W. PALM BEACH, FLA.	STAGE 30# LL + 3#CLL 110 MPH SBC 91	DOOR DETAIL DRAWING	GROUP: 7	DATE: 05/31/95
DRAWN BY:	DRAWN BY:						DRAWING NUMBER: D 95-95502-36	REV. 00
CHECKED BY:	CHECKED BY:							

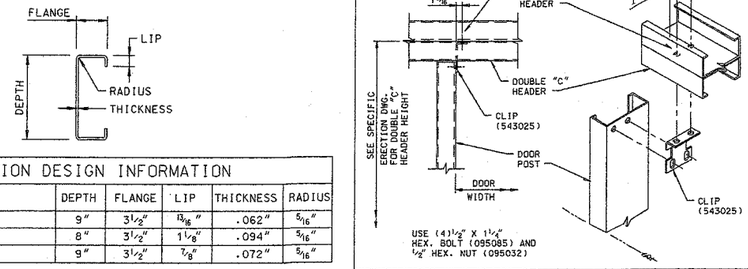

DETAIL D005 — DOOR POST TO DOUBLE "C" HEADER

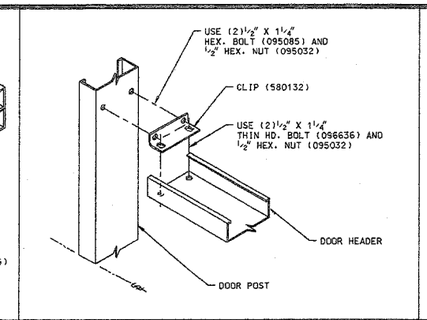

DETAIL D006 — DOOR HEADER TO DOOR POST

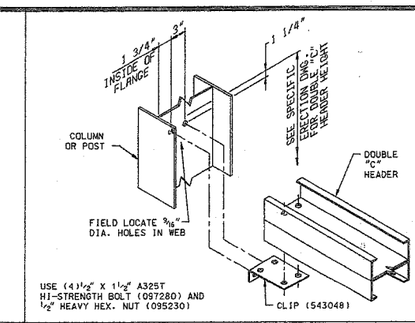

DETAIL D011 — DOUBLE "C" HEADER TO COLUMN OR POST
ONE HEADER CONNECTION

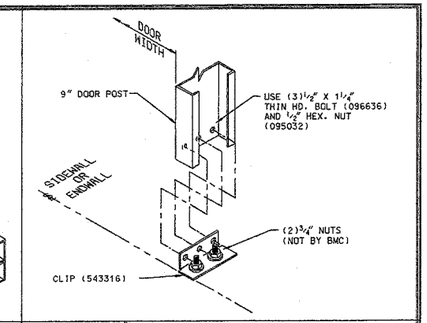

DETAIL D032 — DOOR POST BASE CLIP CONNECTION
9" DOOR POST

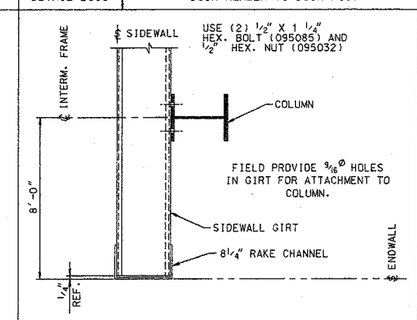

DETAIL G040 — SW GIRT CONN. AT SINGLE CNR. POST
OPEN INTERM. FRAME ENDWALL - 8" SW GIRT

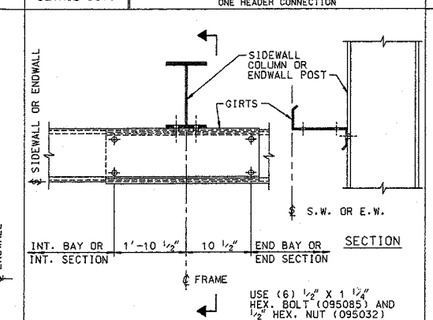

DETAIL G004 — CONTINUOUS SPAN GIRT CONNECTION
END BAY OR SECTION LOCATION

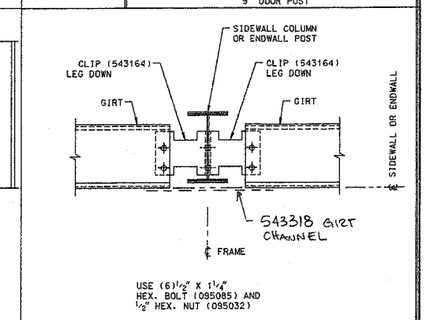

DETAIL G006 — DOUBLE GIRT TO COLUMN CONN.

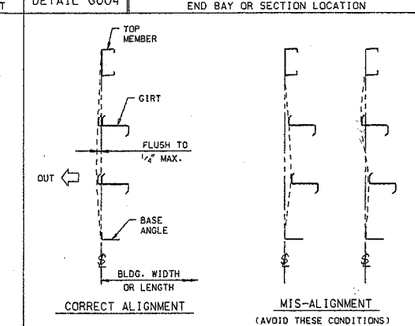

DETAIL G047 — SECONDARY STRUCTURAL ALIGNMENT

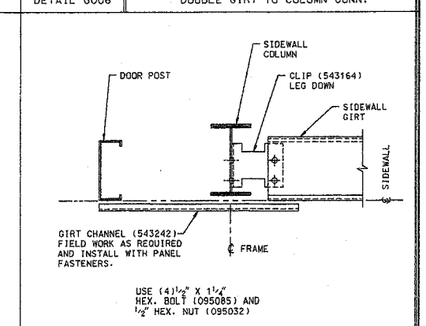

DETAIL G156 — SINGLE GIRT TO SIDEWALL COLUMN CONN.
INTERM. BAY LOCATION - W/ ADJ. DOOR POST

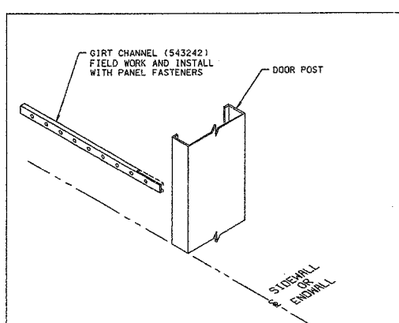

DETAIL G172 — GIRT CHANNEL TO DOOR POST CONNECTION

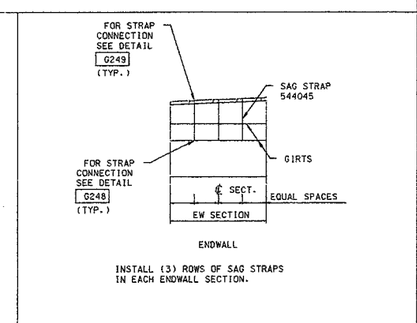

DETAIL G246 — SAG STRAP PLACEMENT IN THE ENDWALL

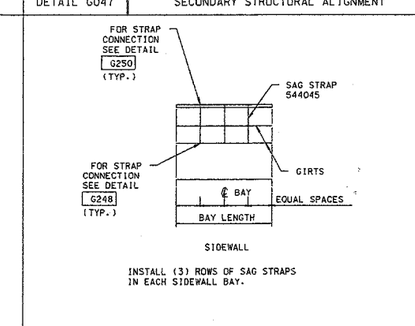

DETAIL G247 — SAG STRAP PLACEMENT IN THE SIDEWALL

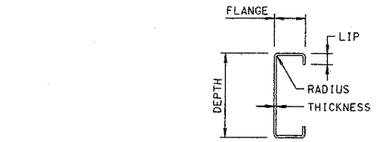

C - SECTION DESIGN INFORMATION					
PART	DEPTH	FLANGE	LIP	THICKNESS	RADIUS
DOOR HEADER 580145	9"	3 1/2"	13/16"	.062"	5/16"
DOOR HEADER 580629	8"	3 1/2"	1 1/8"	.094"	5/16"
DOOR POST 580250	9"	3 1/2"	7/8"	.072"	5/16"

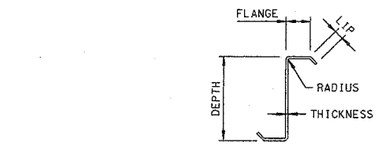

Z - SECTION DESIGN INFORMATION					
PART	DEPTH	FLANGE	LIP	THICKNESS	RADIUS
GIRT 550300 199-2	9 1/2"	2 3/4"	1 3/16"	.100"	1/4"
GIRT 550300 229-2	9 1/2"	2 3/4"	1 3/16"	.100"	1/4"
GIRT 550300 247-2	9 1/2"	2 3/4"	1 3/16"	.100"	1/4"
GIRT 550301 277-2	9 1/2"	2 3/4"	1 3/16"	.110"	1/4"
PURLIN / GIRT 530634 299-4	8"	2 5/8"	1 1/8"	.120"	1/4"
PURLIN / GIRT 530634 455-4	8"	2 5/8"	1 1/8"	.120"	1/4"
PURLIN / GIRT 530634 359-4	8"	2 5/8"	1 1/8"	.120"	1/4"

RELEASED FOR CONSTRUCTION
10-31-95 (DATE) B.O. (INIT)
DESTROY ALL PREVIOUS COPIES
PHASE I FINAL

Approved for Construction

REVISION NO. 1		REVISION NO. 2	
DATE: 12-16-95	ADDED GIRT CHANNEL TO DET G006	DATE:	
DRAWN BY: GMO		DRAWN BY:	
CHECKED BY:		CHECKED BY:	

BUTLER
BUTLER HEAVY STRUCTURES
GENERAL OFFICES-KANSAS CITY, MISSOURI

BUILDER:	PROJECT:	BUILDING ORDER DESCRIPTION:	DRAWING TITLE:		AG FILE NO:
SOUTHERN CONSTRUCTION SYSTEMS INCORPORATED	SOUTH FLORIDA FAIRGROUNDS AMPHITHEATER W. PALM BEACH, FLA.	STAGE 30# LL + 3#CLL 110 MPH SBC 91	WALL SECONDARY STRUCTURAL ELEVATION DETAILS	GROUP: 7	DATE: 05/31/95
				DRAWING NUMBER: D 95-95502-37	REV. 01

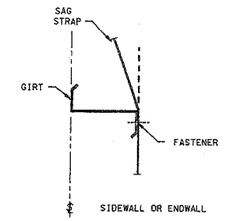

SAG STRAP IS FURNISHED 20' LONG AND MUST BE FIELD CUT TO LENGTH REQUIRED. ATTACH SAG STRAP TO THE GIRT WITH SELF DRILLING SCREW 097216. SPLICE SAG STRAPS AT GIRT LOCATIONS IF NECESSARY.

DETAIL G248 — SAG STRAP TO GIRT CONNECTION

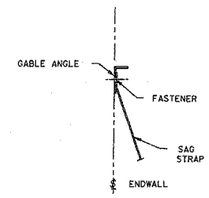

ATTACH SAG STRAP TO THE GABLE ANGLE WITH SELF DRILLING SCREW 097216.

DETAIL G249 — SAG STRAP TO GABLE ANGLE CONNECTION

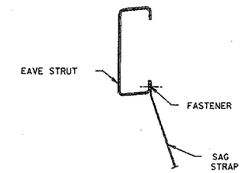

ATTACH SAG STRAP TO THE EAVE STRUT WITH SELF DRILLING SCREW 097216.

DETAIL G250 — SAG STRAP TO EAVE STRUT CONNECTION

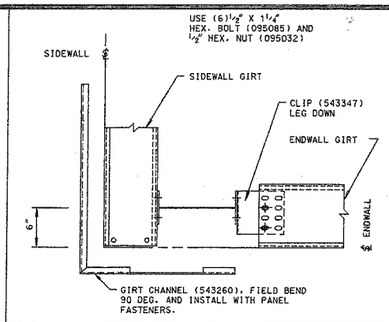

DETAIL G251 — 8" SW & 9 1/2" EW GIRTS TO CORNER POST 6" SETBACK ENDWALL

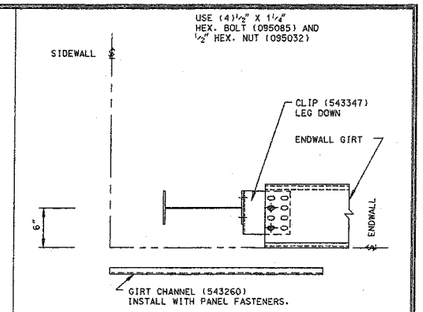

DETAIL G256 — 9 1/2" GIRT TO CORNER POST 6" SETBACK ENDWALL

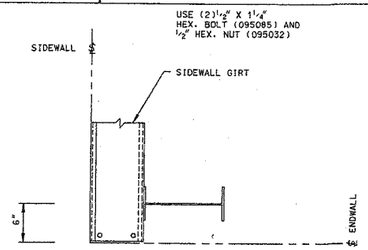

DETAIL G261 — 8" SW GIRT TO H-SECT. CNR. POST 6" SETBACK ENDWALL

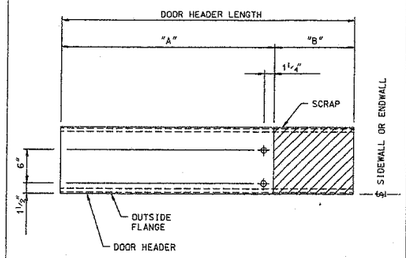

NOTES:
1. FIELD CUT DOOR HEADER AND LOCATE 9/16" DIA. HOLES AS SHOWN.
2. SEE "FIELD WORK SCHEDULE" FOR DIMENSIONS.

DETAIL X026 — FIELD WORK DOOR HEADER

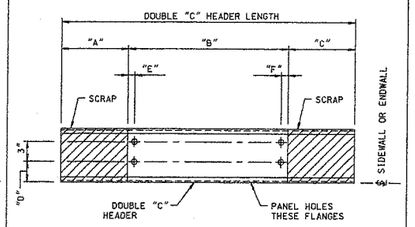

NOTES:
1. FIELD CUT DOUBLE "C" HEADER AND LOCATE 9/16" DIA. HOLES AS SHOWN.
2. SEE "FIELD WORK SCHEDULE" FOR DIMENSIONS.

DETAIL X027 — FIELD WORK DOUBLE "C" HEADER

RELEASED FOR CONSTRUCTION
10-31-95 (DATE) BJ (INIT)
DESTROY ALL PREVIOUS COPIES
PHASE II FINAL

Approved for Construction.

REVISION NO. 1		REVISION NO. 2								
DATE:		DATE:		BUTLER HEAVY STRUCTURES	BUILDER: SOUTHERN CONSTRUCTION SYSTEMS INCORPORATED	PROJECT: SOUTH FLORIDA FAIRGROUNDS AMPHITHEATER W. PALM BEACH, FLA.	BUILDING ORDER DESCRIPTION: STAGE 30# LL + 3#CLL 110 MPH SBC 91	DRAWING TITLE: WALL SECONDARY STRUCTURAL ELEVATION DETAILS	GROUP: 7	AG FILE NO: DATE: 05/31/95
DRAWN BY:		DRAWN BY:		GENERAL OFFICES-KANSAS CITY, MISSOURI					DRAWING NUMBER: D 95-95502-38	REV. 00
CHECKED BY:		CHECKED BY:								

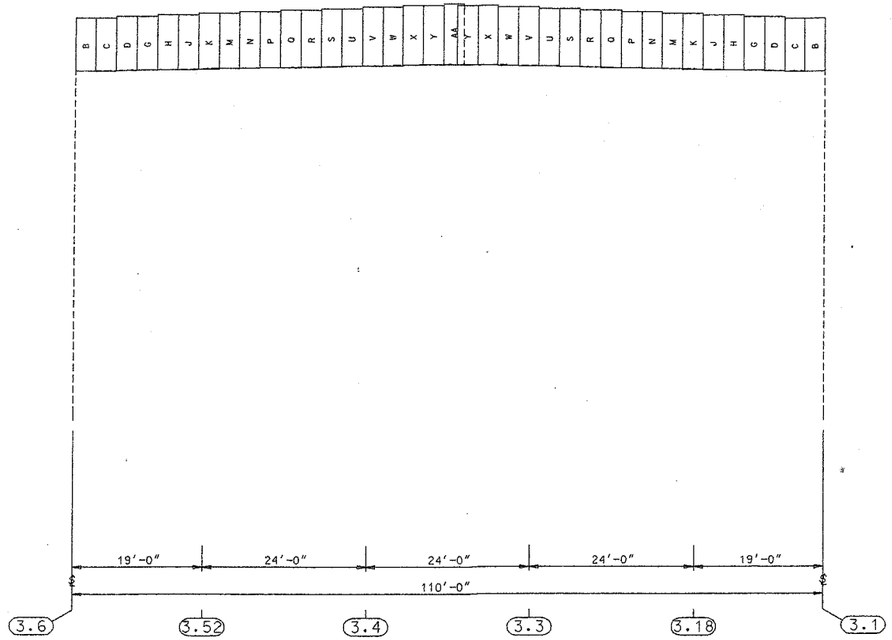

FRONT ENDWALL PANELING ELEVATION
AT GRID D

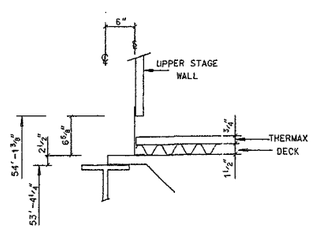

PARALLEL TRANSITION AT FRONT EW

WALL PANEL SCHEDULE					
ID	PART NUMBER	EXT. SUFF.	INT. SUFF.	LENGTH	DESCRIPTION
B	027094	928		069-1	BRII UNPUNCH SQ PNL
C	027094	928		069-3	BRII UNPUNCH SQ PNL
D	027094	928		070-5	BRII UNPUNCH SQ PNL
G	027094	928		069-7	BRII UNPUNCH SQ PNL
H	027094	928		072-1	BRII UNPUNCH SQ PNL
J	027094	928		071-3	BRII UNPUNCH SQ PNL
K	027094	928		073-5	BRII UNPUNCH SQ PNL
M	027094	928		072-7	BRII UNPUNCH SQ PNL
N	027094	928		075-1	BRII UNPUNCH SQ PNL
P	027094	928		074-3	BRII UNPUNCH SQ PNL
Q	027094	928		076-5	BRII UNPUNCH SQ PNL
R	027094	928		075-7	BRII UNPUNCH SQ PNL
S	027094	928		078-1	BRII UNPUNCH SQ PNL
U	027094	928		077-3	BRII UNPUNCH SQ PNL
V	027094	928		079-5	BRII UNPUNCH SQ PNL
W	027094	928		078-7	BRII UNPUNCH SQ PNL
X	027094	928		081-1	BRII UNPUNCH SQ PNL
Y	027094	928		080-3	BRII UNPUNCH SQ PNL
AA	027094	928		082-7	BRII UNPUNCH SQ PNL

SPECIAL NOTES:

WP00100 928 INDICATES 26GA ISLAND WHITE

STANDARD NOTES:

WP0010 INSTALL OVERHEAD DOOR TRIM FOR BRII WALL PANELS PER DRAWING C-104219

WP0014 BRII WALL PANEL-TO-PANEL FASTENERS ARE 097364 (1/4 X 3/4 T-30 TORX SELF DRILLING SCREW).

WP0018 BRII WALL PANEL-TO-STRUCTURAL TOP/BASE FASTENERS ARE 097362 (11/32 X 7/8 T-45 TORX SCRUBOLT).

WP0028 FOR GENERAL BRII WALL PNL INFO. REFER TO THE FOLLOWING DWGS :

C- 104217 - GENERAL PANELING INFORMATION
C- 105017 - INSULATION AT TOP OF WALL-SIDEWALL
C- 105018 - INSULATION AT TOP OF WALL-ENDWALL
B-1080854 - WALL PANEL LENGTH CALCULATIONS
B-1080873 - GENERAL INSTALLATION TORX FASTENERS

WP0030 THE DIRECTION OF ERECTION FOR BUTLERIB II WALL PANEL IS LEFT-TO-RIGHT.

IMPORTANT APPEARANCE ITEM
****
FIELD TRIM INSULATION SO THAT THERE IS MAXIMUM OF 3" THICKNESS BETWEEN STRUCTURALS AND FLAT SURFACE OF WALL PANEL. WHEN TRIMMING INSULATION, BE CAREFUL NOT TO CUT VAPOR RETARDER.

WP0074 BRII WALL PANEL-TO-GIRT FASTENERS ARE 097362 (11/32 X 1 1/2 T-45 TORX SCRUBOLT).

UNPUNCHED DOOR SIDE GIRTS REQUIRE FIELD DRILLED 5/16" HOLES.

RELEASED FOR CONSTRUCTION
10-31-95 (DATE) B.P. (INIT)
DESTROY ALL PREVIOUS COPIES
PHASE FINAL

Approved for Construction

REVISION NO. 1		REVISION NO. 2			BUILDER:	PROJECT:	BUILDING ORDER DESCRIPTION:	DRAWING TITLE:		AG FILE NO:
DATE:		DATE:		BUTLER HEAVY STRUCTURES	SOUTHERN CONSTRUCTION SYSTEMS INCORPORATED	SOUTH FLORIDA FAIRGROUNDS AMPHITHEATER W. PALM BEACH, FLA.	STAGE 30# LL + 3#CLL 110 MPH SBC 91	WALL PANEL DRAWING	GROUP: 7	DATE: 05/31/95
DRAWN BY:		DRAWN BY:		GENERAL OFFICES-KANSAS CITY, MISSOURI					DRAWING NUMBER: D 95-95502-39	REV. 00
CHECKED BY:		CHECKED BY:								

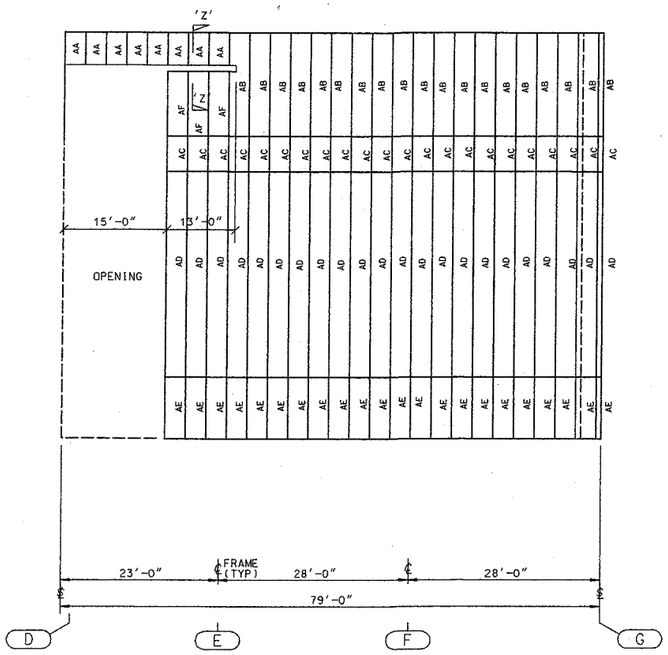

RIGHT SIDEWALL PANELING ELEVATION
AT GRID 3.1

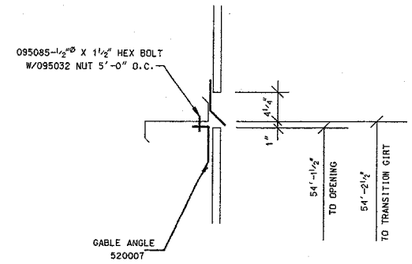

SECTION 'Z-Z'

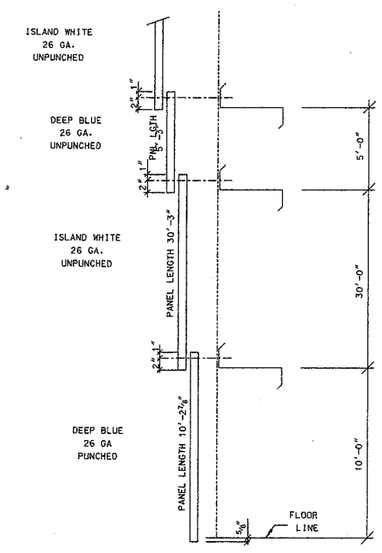

SIDE VIEW EXT. PANEL

WALL PANEL SCHEDULE					
ID	PART NUMBER	EXT. SUFF.	INT. SUFF.	LENGTH	DESCRIPTION
AA	027094	928		62-0	BRII UNPUNCH SQ PNL
AB	027094	928		177-7	BRII UNPUNCH SQ PNL
AC	027094	739		63-0	BRII UNPUNCH SQ PNL
AD	027094	928		363-0	BRII UNPUNCH SQ PNL
AE	027095	739		122-7	BRII PUNCHED SQ PNL
AF	027094	928		110-5	BRII UNPUNCH SQ PNL

SPECIAL NOTE:

WP00100 928 INDICATES 26 GA. ISLAND WHITE

Approved for Construction

REVISED DRAWING
11-8-95 (DATE) (INIT)
DESTROY ALL PREVIOUS COPIES

REVISION NO. 1		REVISION NO. 2	
DATE: 11/08/95	ADDED SHEETING ANGLE CONNECTION PER ENGINEERING	DATE:	
DRAWN BY: JBH		DRAWN BY:	
CHECKED BY: Bird		CHECKED BY:	

BUTLER
BUTLER HEAVY STRUCTURES
GENERAL OFFICES-KANSAS CITY, MISSOURI

BUILDER:	PROJECT:	BUILDING ORDER DESCRIPTION:	DRAWING TITLE:		AG FILE NO:
SOUTHERN CONSTRUCTION SYSTEMS INCORPORATED	SOUTH FLORIDA FAIRGROUNDS AMPHITHEATER W. PALM BEACH, FLA.	STAGE 30# LL + 3#CLL 110 MPH SBC 91	WALL PANEL DRAWING	GROUP: 7	DATE: 05/31/95
				DRAWING NUMBER: D 95-95502-40	REV. 01

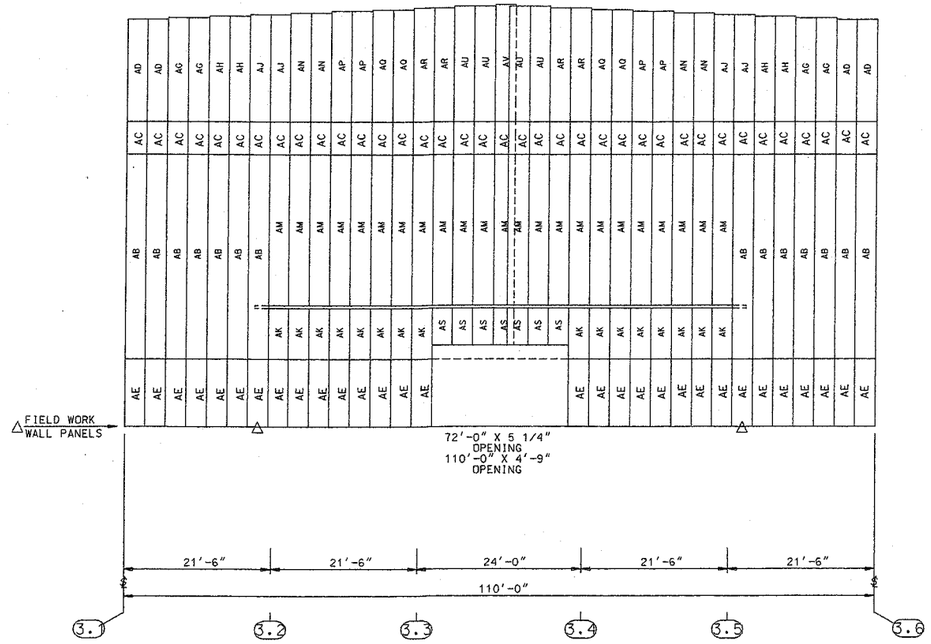

REAR ENDWALL PANELING ELEVATION
AT GRID G

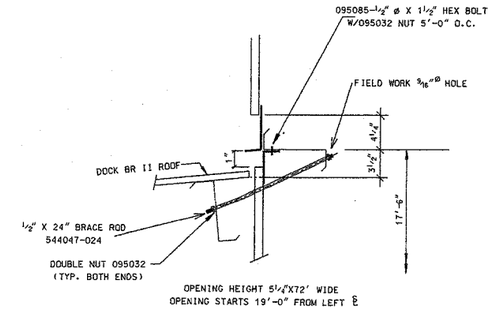

OPENING FOR PERPENDICULAR TRANSITION

WALL PANEL SCHEDULE					
ID	PART NUMBER	EXT. SUFF.	INT. SUFF.	LENGTH	DESCRIPTION
AB	027094	928		363-0	BRII UNPUNCH SQ PNL
AD	027094	928		179-4	BRII UNPUNCH SQ PNL
AG	027094	928		182-4	BRII UNPUNCH SQ PNL
AH	027094	928		185-4	BRII UNPUNCH SQ PNL
AJ	027094	928		188-4	BRII UNPUNCH SQ PNL
AK	027094	928		089-6	BRII UNPUNCH SQ PNL
AM	027094	928		268-0	BRII UNPUNCH SQ PNL
AN	027094	928		191-4	BRII UNPUNCH SQ PNL
AP	027094	928		194-4	BRII UNPUNCH SQ PNL
AQ	027094	928		197-4	BRII UNPUNCH SQ PNL
AR	027094	928		200-4	BRII UNPUNCH SQ PNL
AS	027094	928		064-6	BRII UNPUNCH SQ PNL
AU	027094	928		203-4	BRII UNPUNCH SQ PNL
AV	027094	928		206-4	BRII UNPUNCH SQ PNL
AC	027094	739		63-0	BRII UNPUNCH SQ PNL
AE	027095	739		122-7	BRII PUNCHED SQ PNL

SPECIAL NOTE:
WPO 100 928 INDICATES 26 GA. ISLAND WHITE

Approved for Construction

REVISED DRAWING
11-8-95 (DATE) (INIT)
DESTROY ALL PREVIOUS COPIES

REVISION NO. 1		REVISION NO. 2	
DATE: 11/08/95	ADDED INFORMATION AS REQUIRED BY ENGINEERING	DATE:	
DRAWN BY: JBH		DRAWN BY:	
CHECKED BY: Bird		CHECKED BY:	

BUTLER
BUTLER HEAVY STRUCTURES
GENERAL OFFICES-KANSAS CITY, MISSOURI

BUILDER:	PROJECT:	BUILDING ORDER DESCRIPTION:	DRAWING TITLE:		AG FILE NO:
SOUTHERN CONSTRUCTION SYSTEMS INCORPORATED	SOUTH FLORIDA FAIRGROUNDS AMPHITHEATER W. PALM BEACH, FLA.	STAGE 30# LL + 3#CLL 110 MPH SBC 91	WALL PANEL DRAWING	GROUP: 7	DATE: 05/31/95
				DRAWING NUMBER: D 95-95502-41	REV. 01

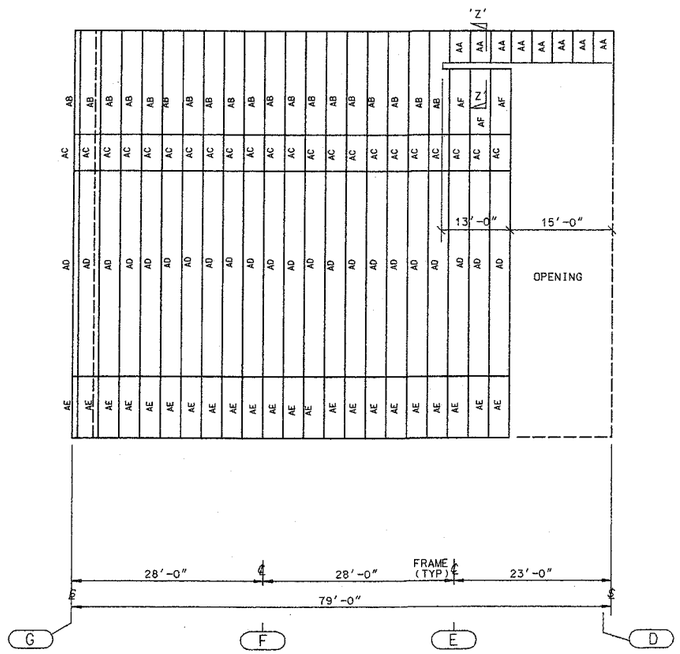

LEFT SIDEWALL PANELING ELEVATION
AT GRID 3.6

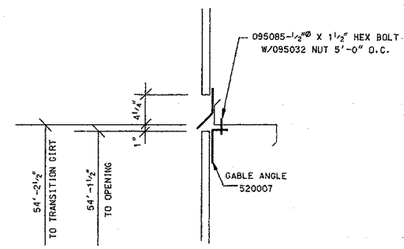

SECTION 'Z-Z'

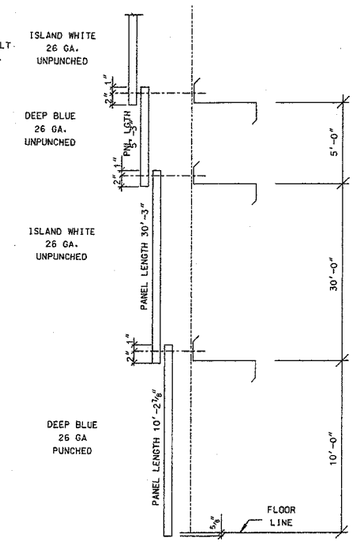

SIDE VIEW EXT. PANEL

WALL PANEL SCHEDULE

ID	PART NUMBER	EXT. SUFF.	INT. SUFF.	LENGTH	DESCRIPTION
AA	027094	928		62-0	BRII UNPUNCH SQ PNL
AB	027094	928		177-7	BRII UNPUNCH SQ PNL
AC	027094	739		63-0	BRII UNPUNCH SQ PNL
AD	027094	928		363-0	BRII UNPUNCH SQ PNL
AE	027095	739		122-7	BRII PUNCHED SQ PNL
AF	027094	928		110-5	BRII UNPUNCH SQ PNL

SPECIAL NOTE:
WP00100 928 INDICATES 26 GA. ISLAND WHITE

REVISED DRAWING
11-8-95 (DATE)
(INIT)
DESTROY ALL PREVIOUS COPIES

Approved for Construction

REVISION NO. 1		REVISION NO. 2								
DATE: 11/08/95	ADDED CONNECTION FOR SHEETING ANGLE AS REQUIRED BY ENGINNEERING	DATE:		BUTLER HEAVY STRUCTURES	BUILDER: SOUTHERN CONSTRUCTION SYSTEMS INCORPORATED	PROJECT: SOUTH FLORIDA FAIRGROUNDS AMPHITHEATER W. PALM BEACH, FLA.	BUILDING ORDER DESCRIPTION: STAGE 30# LL + 3#CLL 110 MPH SBC 91	DRAWING TITLE: WALL PANEL DRAWING	GROUP: 7	AG FILE NO: DATE: 05/31/95
DRAWN BY: JBH		DRAWN BY:							DRAWING NUMBER: D 95-95502-42	REV. 01
CHECKED BY: Bird		CHECKED BY:		GENERAL OFFICES-KANSAS CITY, MISSOURI						

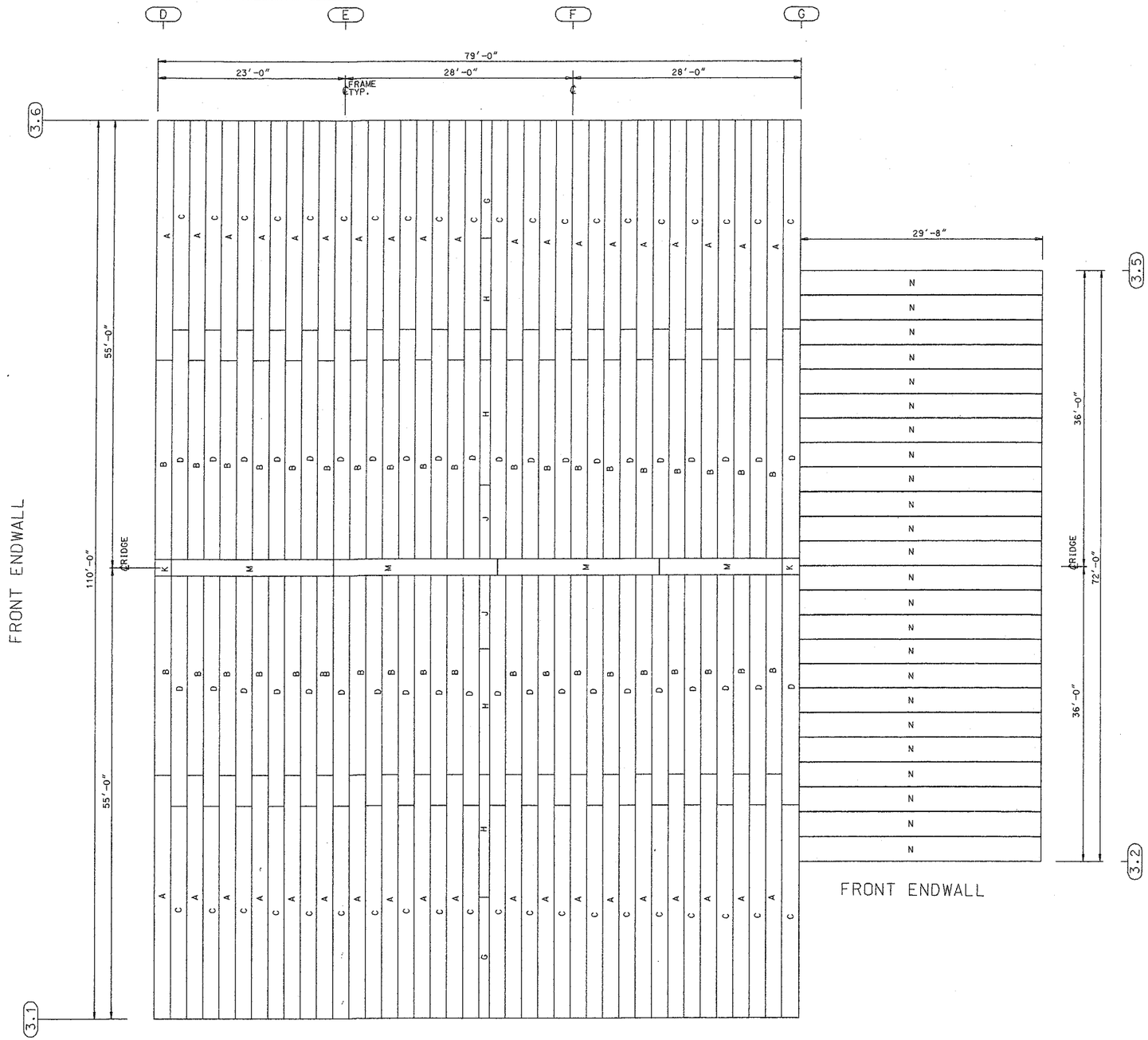

ROOF PANEL SCHEDULE					
ID	PART NUMBER	SUFF.	LENGTH	DESCRIPTION	HOLE TO HOLE
A	560119	669	350-5	MR24 EAVE PANEL ALZN	28'-4 23/32"
B	560105	669	317-7	MR24 SPLICE PANEL ALZN	25'-8 9/32"
C	560119	669	306-5	MR24 EAVE PANEL ALZN	24'-8 5/8"
D	560105	669	361-7	MR24 SPLICE PANEL ALZN	29'-4 5/16"
G	560591	643	174-4	12" MR24 PANEL ALZN	13'-8 1/2"
H	560591	643	182-1	12" MR24 PANEL ALZN	14'-8 9/32"
J	560586	643	141-6	12" MR24 PANEL ALZN	11'-0 1/8"
K	560173			MR24 RIDGE END COVER	
M	560157	645		MR24 RIDGE COVER	
N	560382	645	358-7	BRII EAVE PANEL ALZN	28'-6 23/32"

STANDARD NOTES:

RP0032 SEE GENERAL INDEX DRAWING D-1080220 FOR ADDITIONAL ERECTION DRAWING REQUIREMENTS.

RP0038 W A R N I N G
****
PANELS WITH PROTECTIVE OIL COATING ARE SLIPPERY. PROCEED WITH CAUTION. WIPE CLEAN IF NECESSARY.

RP0048 PANEL CLIP FASTENERS
****
USE LONG SCRUBOLT 097270 (GREEN 3/8 X 2 1/4) FOR PANEL CLIP-TO-PURLIN CONNECTIONS.

RP0054 DIRECTION OF ERECTION FOR MR-24 PANELS ON LEFT SLOPE IS FRONT TO REAR OF ROOF SURFACE.

RP0055 DIRECTION OF ERECTION FOR MR-24 PANELS ON RIGHT SLOPE IS REAR TO FRONT OF ROOF SURFACE.

RP0059 MR24 RIDGE COVER IS FURNISHED IN 20' LENGTHS. FIELD CUT THE RIDGE COVER TO LENGTH AS REQUIRED.

RP0062 ROOF PANELS MUST BE ATTACHED TO ALL ROOF STRUCTURALS TO INSURE THE STRUCTURAL INTEGRITY OF THE ROOF. THIS INCLUDES ALL PURLINS ADDED FOR SPECIFIC LOADING CONDITIONS. ETC.

ENOUGH PANEL-TO-STRUCTURAL FASTENERS. CLIPS (IF MR-24/CMR-24) HAVE BEEN FURNISHED FOR ALL ROOF STRUCTURALS.

RP0073 HOLE TO HOLE DIMENSION IN THE ROOF PANEL SCHEDULE IS NORMALLY THE DISTANCE BETWEEN THE STRUCTUAL ATTACHMENTS AT EACH END OF ROOF PANEL (SEE DWG B0000001). THIS MAY NOT BE TRUE FOR CUSTOM PANEL CONDITIONS.

RP0005 PRE-PUNCHED PANEL HOLES IN BRII PANELS FOR PANEL TO PANEL FASTENERS MUST USE LOCK-RIVET 096306 (13/32 GREEN WASHER).

RP0019 ROOF PANEL-TO-STRUCTURAL FASTENERS FOR BRII PANELS ARE 096902 (11/32 X 7/8 SCRUBOLT).

RP0025 A. FOR BRII ROOF PANEL SEALANT APPLICATION SEE DWG. 102961.
B. DIRECTION OF ERECTION FOR BUTLERIB II ROOF PANELS IS FROM FRONT ENDWALL TO REAR ENDWALL ACROSS THE ENTIRE ROOF.

RP0026 FOR ADDITIONAL INFORMATION. SEE BRII PANEL INSTALLATION DWG. 104288.

RP0070 ROOF PANEL-TO-PANEL FASTENERS FOR BRII PANELS ARE 097357 (1/4 X 7/8 SELF DRILLING SCREW).

RELEASED FOR CONSTRUCTION
10-31-95 (DATE) (INIT)
DESTROY ALL PREVIOUS COPIES
PHASE FINAL

Approved for Construction.

REVISION NO. 1	REVISION NO. 2		BUILDER:	PROJECT:	BUILDING ORDER DESCRIPTION:	DRAWING TITLE:		AG FILE NO:
DATE:	DATE:	BUTLER BUTLER HEAVY STRUCTURES GENERAL OFFICES-KANSAS CITY, MISSOURI	SOUTHERN CONSTRUCTION SYSTEMS INCORPORATED	SOUTH FLORIDA FAIRGROUNDS AMPHITHEATER W. PALM BEACH, FLA.	STAGE 30# LL + 3#CLL 110 MPH SBC 91	ROOF PANEL DRAWING	GROUP: 7	DATE: 05/31/95
DRAWN BY:	DRAWN BY:						DRAWING NUMBER:	REV.
CHECKED BY:	CHECKED BY:						D 95-95502-43	00

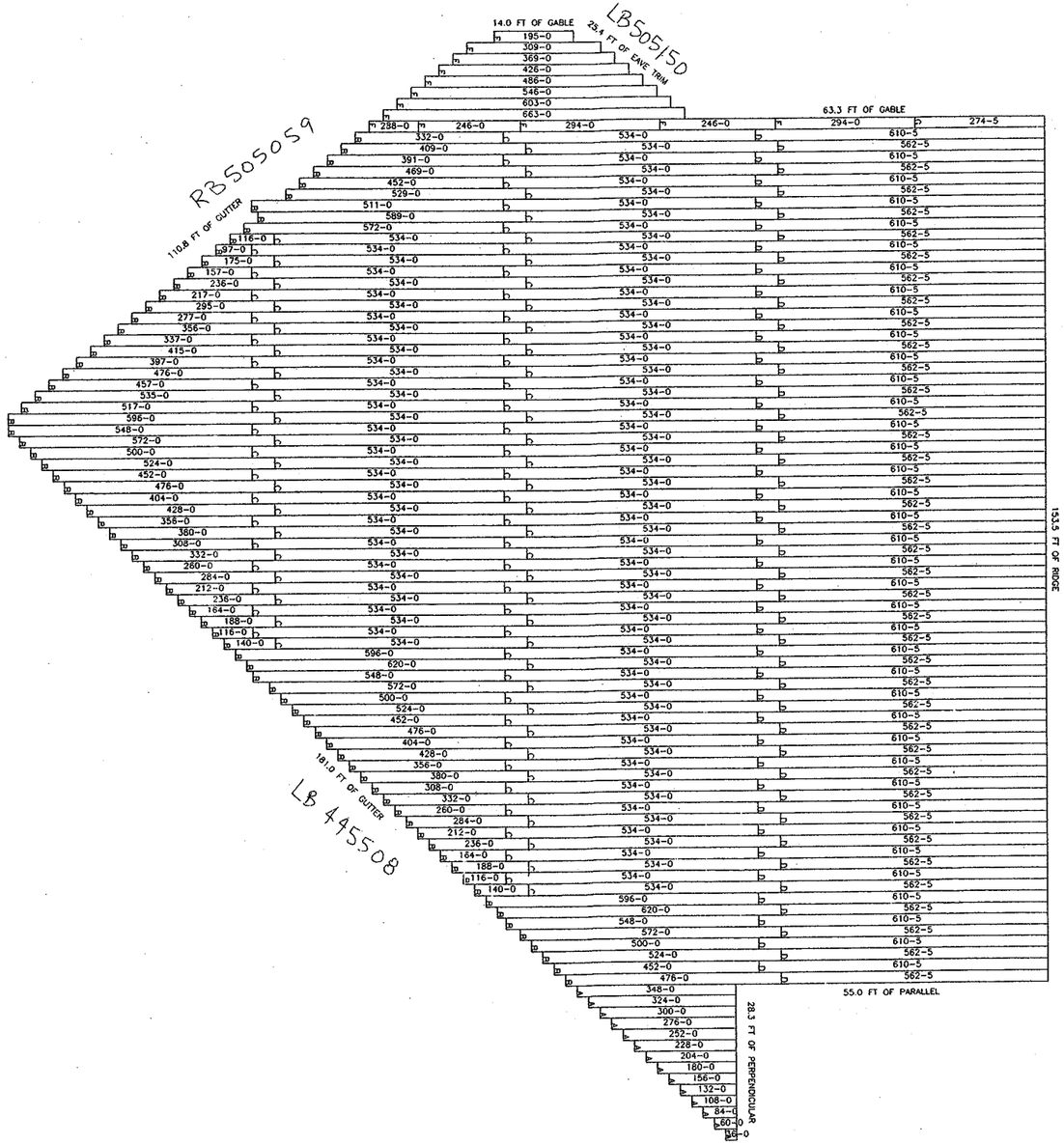

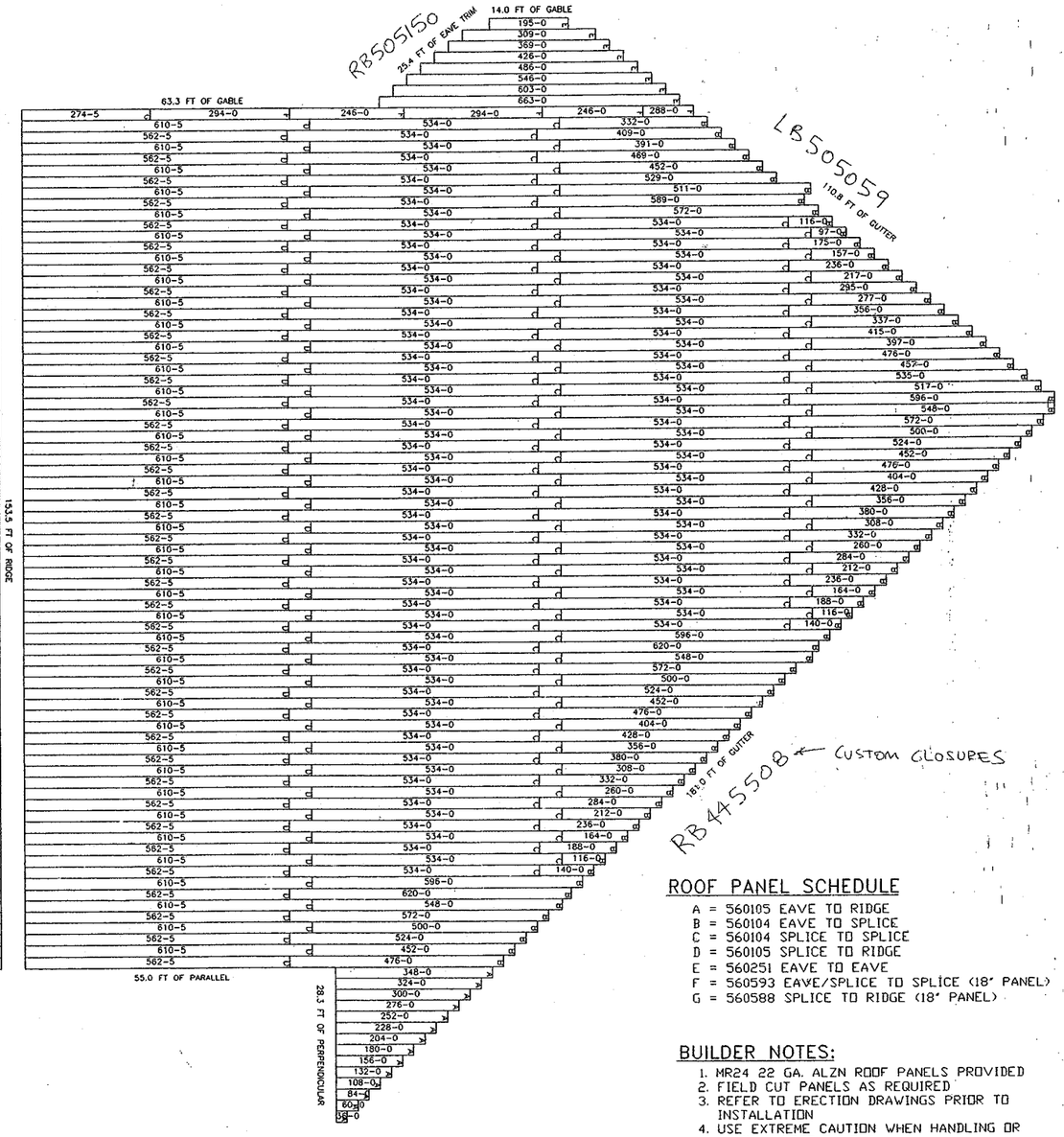

ROOF PANEL LAYOUT PLAN

ROOF PANEL SCHEDULE

A = 560105 EAVE TO RIDGE
B = 560104 EAVE TO SPLICE
C = 560104 SPLICE TO SPLICE
D = 560105 SPLICE TO RIDGE
E = 560251 EAVE TO EAVE
F = 560593 EAVE/SPLICE TO SPLICE (18" PANEL)
G = 560588 SPLICE TO RIDGE (18" PANEL)

BUILDER NOTES:

1. MR24 22 GA. ALZN ROOF PANELS PROVIDED
2. FIELD CUT PANELS AS REQUIRED
3. REFER TO ERECTION DRAWINGS PRIOR TO INSTALLATION
4. USE EXTREME CAUTION WHEN HANDLING OR CUTTING ROOF PANELS

Approved for Construction

REVISION NO. 1	REVISION NO. 2	REVISION NO. 3		BUILDER:	PROJECT:	BUILDING ORDER DESCRIPTION:	DRAWING TITLE:	DRAWN BY: KAD	FILE NO:
DATE:	DATE:	DATE:	BUTLER MANUFACTURING COMPANY GENERAL OFFICES-KANSAS CITY, MISSOURI	BUTLER CONSTRUCTION	SOUTH FLORIDA FAIRGROUNDS AMPHITHEATER		ROOF PANEL LAYOUT PLAN	CHECKED BY:	DATE: 10-20-95
DRAWN BY:	DRAWN BY:	DRAWN BY:						DRAWING NUMBER: (95502) D 95-272214-44	REV. 00
CHECKED BY:	CHECKED BY:	CHECKED BY:							

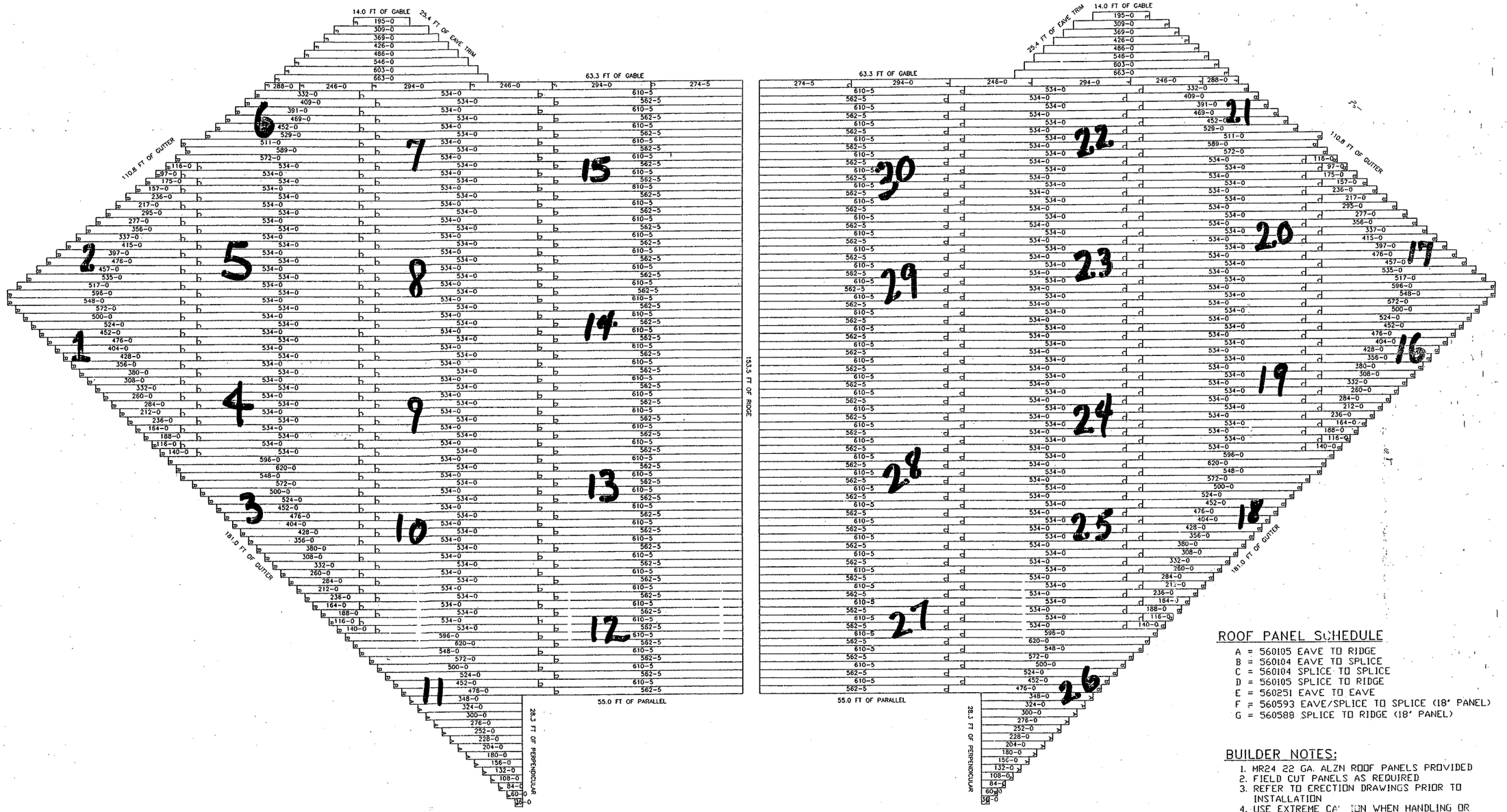

ROOF PANEL LAYOUT PLAN

ROOF PANEL SCHEDULE

A = 560105 EAVE TO RIDGE
B = 560104 EAVE TO SPLICE
C = 560104 SPLICE TO SPLICE
D = 560105 SPLICE TO RIDGE
E = 560251 EAVE TO EAVE
F = 560593 EAVE/SPLICE TO SPLICE (18' PANEL)
G = 560588 SPLICE TO RIDGE (18' PANEL)

BUILDER NOTES:

1. MR24 22 GA. ALZN ROOF PANELS PROVIDED
2. FIELD CUT PANELS AS REQUIRED
3. REFER TO ERECTION DRAWINGS PRIOR TO INSTALLATION
4. USE EXTREME CAUTION WHEN HANDLING OR CUTTING ROOF PANELS

Approved for Construction

REVISION NO. 1	REVISION NO. 2	REVISION NO. 3		BUILDER:	PROJECT:	BUILDING ORDER DESCRIPTION:	DRAWING TITLE:	DRAWN BY: KAD	FILE NO:
DATE:	DATE:	DATE:	BUTLER MANUFACTURING COMPANY GENERAL OFFICES-KANSAS CITY, MISSOURI	BUTLER CONSTRUCTION	SOUTH FLORIDA FAIRGROUNDS AMPHITHEATER		ROOF PANEL LAYOUT PLAN CRATE LOCATION	CHECKED BY:	DATE: 12-20-95
DRAWN BY:	DRAWN BY:	DRAWN BY:						DRAWING NUMBER: 95502 D 95-Z72214-45	REV. 00
CHECKED BY:	CHECKED BY:	CHECKED BY:							

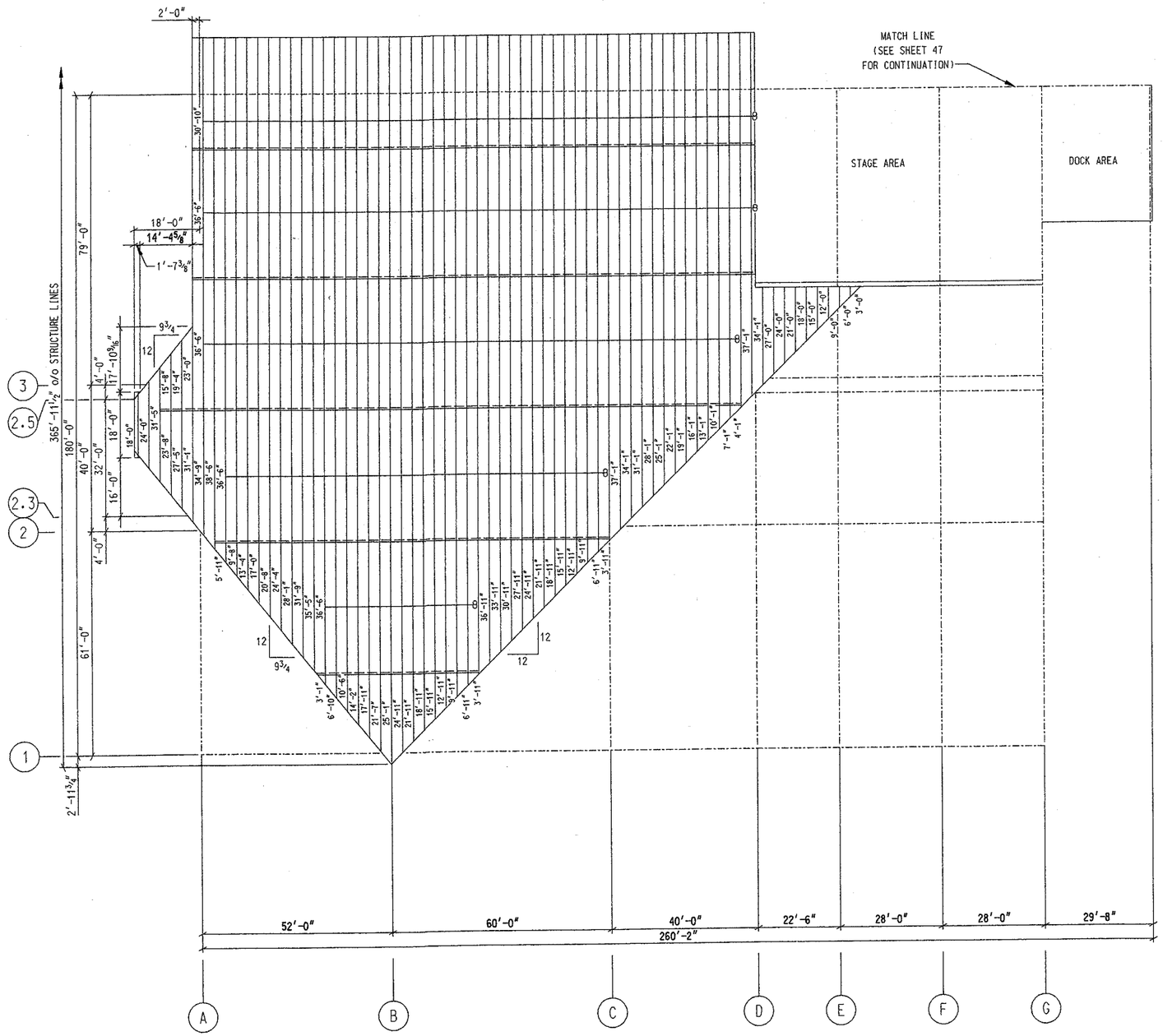

PARTIAL ROOF DECK LAYOUT PLAN

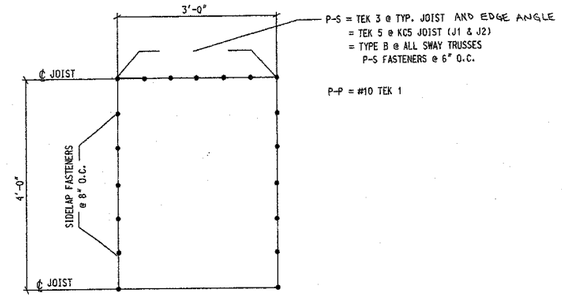

DECK FASTENERS

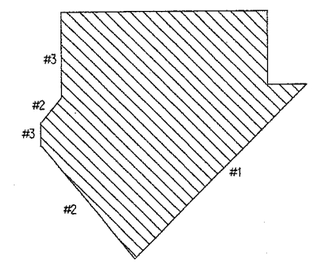

#1 EAVE ANGLE- FG1706-144"
#2 EAVE ANGLE-FG1707-132"
#3 EAVE ANGLE-FG1708-104"

#1,#2, & #3-EAVE CHANNEL-FG1657 ATTACHES TO EAVE ANGLE W/097230 SDS @ 1'-0" O.C.

EAVE MEMBER LAYOUT

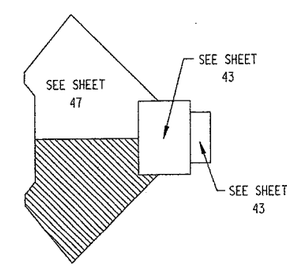

KEY PLAN

Approved for Construction

REVISION NO. 1	REVISION NO. 2		BUILDER:	PROJECT:	BUILDING ORDER DESCRIPTION:	DRAWING TITLE:		AG FILE NO:
DATE:	DATE:	BUTLER BUTLER HEAVY STRUCTURES GENERAL OFFICES-KANSAS CITY, MISSOURI	SOUTHERN CONSTRUCTION SYSTEMS INCORPORATED	SOUTH FLORIDA FAIRGROUNDS AMPHITHEATER W. PALM BEACH, FLA.	CANOPY 30# LL + 3#CLL 110 MPH SBC 91	PARTIAL ROOF DECK PLAN DRAWING	GROUP: 7	DATE: 09/12/95
DRAWN BY:	DRAWN BY:						DRAWING NUMBER:	REV.
CHECKED BY:	CHECKED BY:						D 95-95502-46	

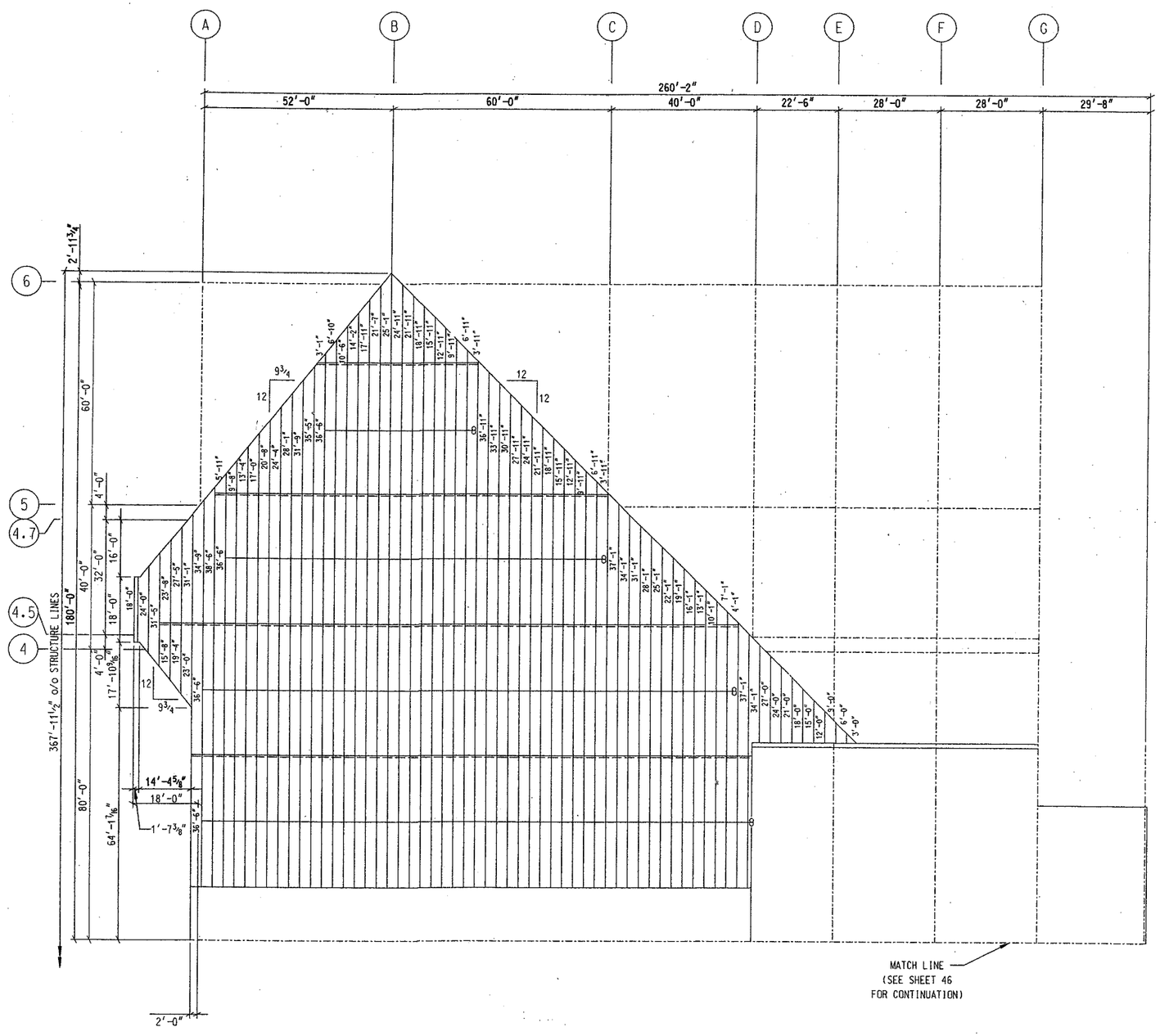

PARTIAL ROOF DECK LAYOUT PLAN

Approved for Construction

FOR CONSTRUCTION

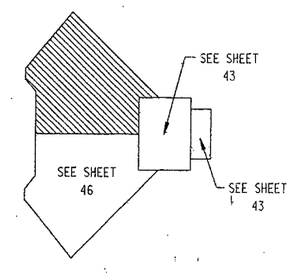

KEY PLAN

REVISION NO. 1	REVISION NO. 2			BUILDER:	PROJECT:	BUILDING ORDER DESCRIPTION:	DRAWING TITLE:		AG FILE NO:
DATE:	DATE:	BUTLER BUTLER HEAVY STRUCTURES GENERAL OFFICES-KANSAS CITY, MISSOURI		SOUTHERN CONSTRUCTION SYSTEMS INCORPORATED	SOUTH FLORIDA FAIRGROUNDS AMPHITHEATER W. PALM BEACH, FLA.	CANOPY 30# LL + 3#CLL 110 MPH SBC 91	PARTIAL ROOF DECK PLAN DRAWING	GROUP: 7	DATE: 09/12/95
DRAWN BY:	DRAWN BY:							DRAWING NUMBER:	REV.
CHECKED BY:	CHECKED BY:							D 95-95502-47	

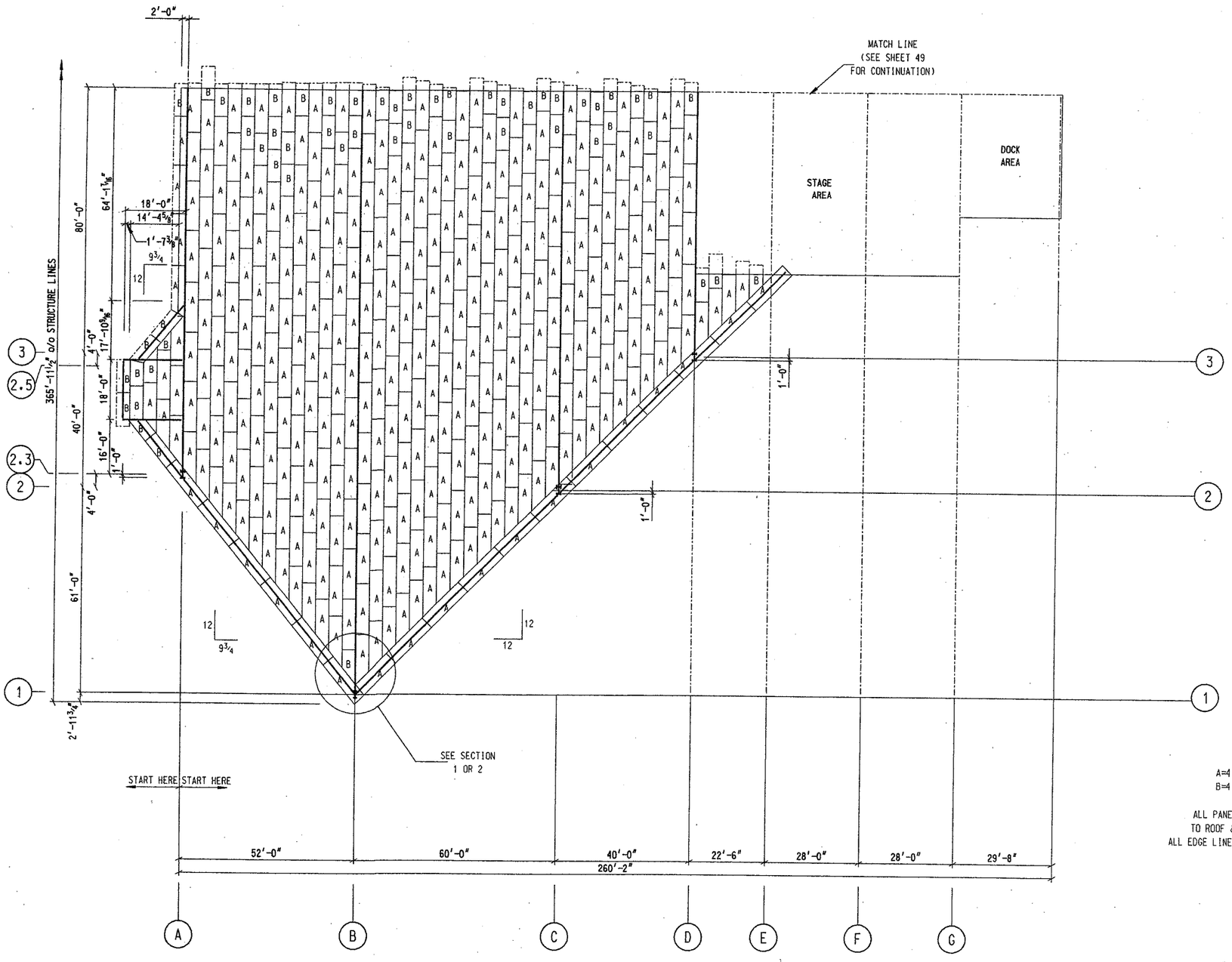

PARTIAL CANOPY ROOF INSULATION PLAN

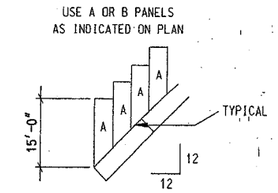

SECTION 1

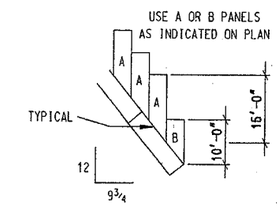

SECTION 2

LEGEND
A=4 X 15 SHEETS
B=4 X 10 SHEETS

ALL PANELS MUST BE SQUARE
TO ROOF & ROOF DECK. CHECK
ALL EDGE LINES @ FREQUENT INTERVALS

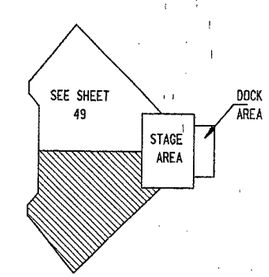

KEY PLAN

Approved for Construction

REVISION NO. 1		REVISION NO. 2							
DATE: 10-6-1995	REVISED MATERIAL SIZE PER ENG. REQUEST	DATE:		BUTLER BUTLER HEAVY STRUCTURES GENERAL OFFICES-KANSAS CITY, MISSOURI	BUILDER: SOUTHERN CONSTRUCTION SYSTEMS INCORPORATED	PROJECT: SOUTH FLORIDA FAIRGROUNDS AMPHITHEATER W. PALM BEACH, FLA.	BUILDING ORDER DESCRIPTION: CANOPY 30# LL + 3#CLL 110 MPH SBC 91	DRAWING TITLE: PARTIAL CANOPY ROOF INSULATION PLAN DRAWING	AG FILE NO:
DRAWN BY: JBH		DRAWN BY:						GROUP: 7	DATE: 09/12/95
CHECKED BY: RS		CHECKED BY:						DRAWING NUMBER: D 95-95502-48	REV. 01

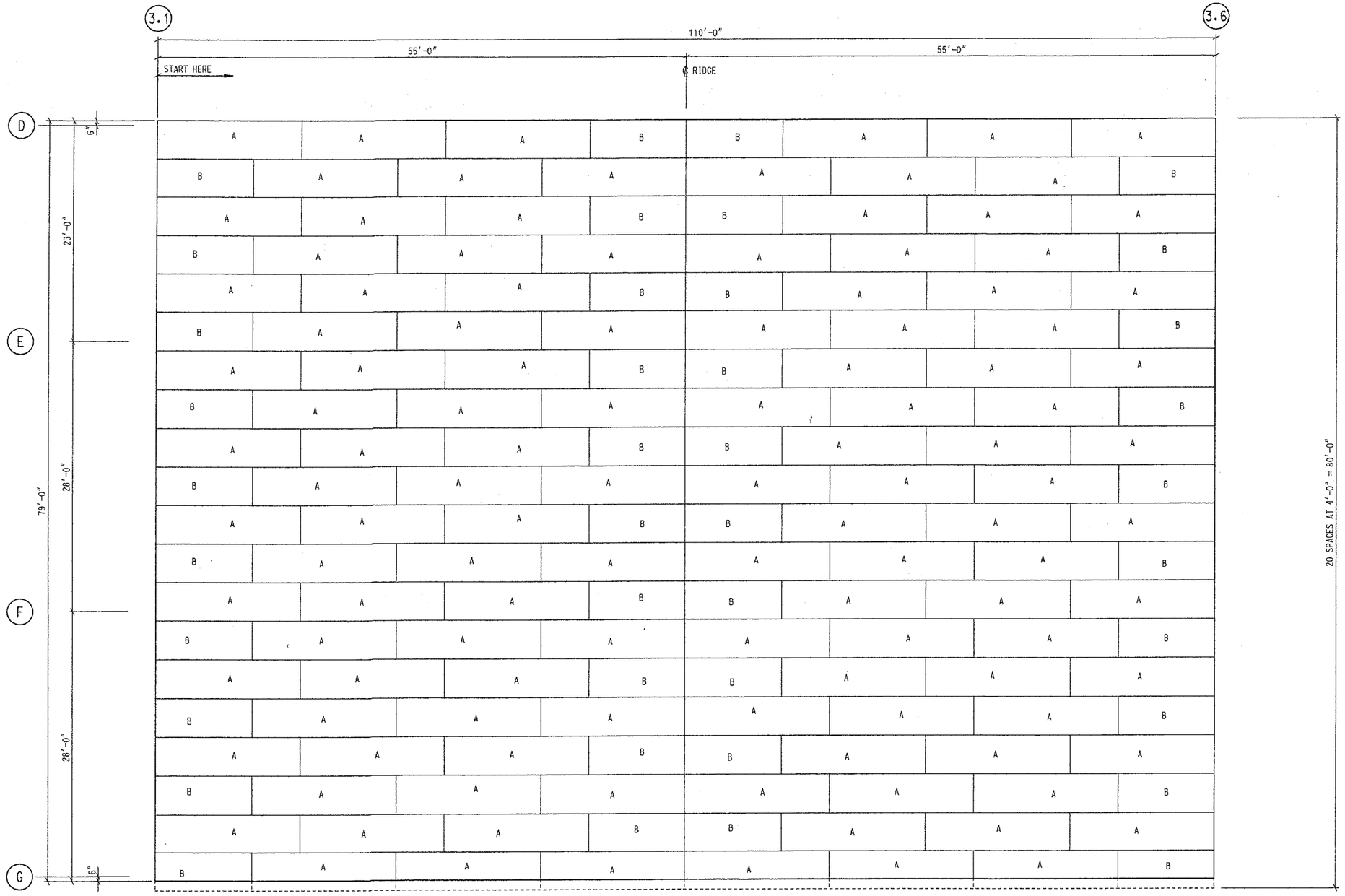

RELEASED FOR CONSTRUCTION
(DATE) 10-31-95 (INIT) B
DESTROY ALL PREVIOUS COPIES
PHASE I FINAL

LEGEND
A=4 X 15 SHEETS
B=4 X 10 SHEETS

ALL PANELS MUST BE SQUARE
TO ROOF & ROOF DECK CHECK
ALL EDGE LINES @ FREQUENT INTERVALS

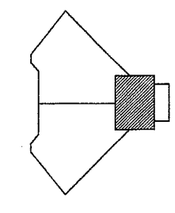

KEY PLAN

ROOF INSULATION LAYOUT PLAN

Approved for Construction

REVISION NO. 1		REVISION NO. 2				BUILDER:	PROJECT:	BUILDING ORDER DESCRIPTION:	DRAWING TITLE:		AG FILE NO:
DATE: 10-6-1995	REVISED MATERIAL SIZE PER ENG. REQUEST	DATE: 10-10-1995	REVISED MATERIAL LAYOUT PER ENG. REQUEST	BUTLER BUTLER HEAVY STRUCTURES GENERAL OFFICES-KANSAS CITY, MISSOURI		SOUTHERN CONSTRUCTION SYSTEMS INCORPORATED	SOUTH FLORIDA FAIRGROUNDS AMPHITHEATER W. PALM BEACH, FLA.	STAGE 30# LL + 3#CLL 110 MPH SBC 91	ROOF INSULATION PLAN DRAWING	GROUP: 7	DATE: 9/95
DRAWN BY: JBH		DRAWN BY: JBH								DRAWING NUMBER: D 95-95502-51	REV. 02
CHECKED BY: RS		CHECKED BY: RS									